五星减速机
WUXING JIANSUJI

AC系列交流减速电机

泰兴市五星减速机有限公司

Taixing Five Star Reducer Co., Ltd.

地址 ：江苏省泰兴市姚王镇118号

24小时服务热线 ：13961848999

扫一扫加微信

15W

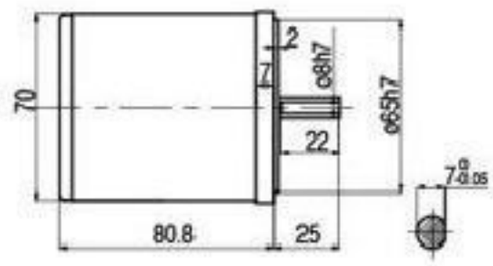

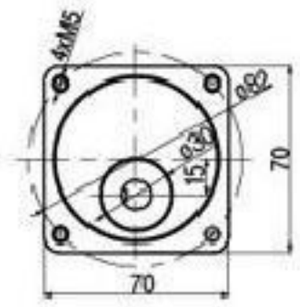

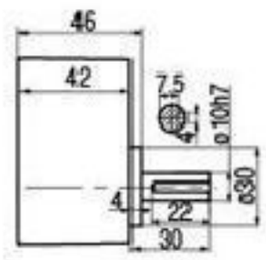

25W

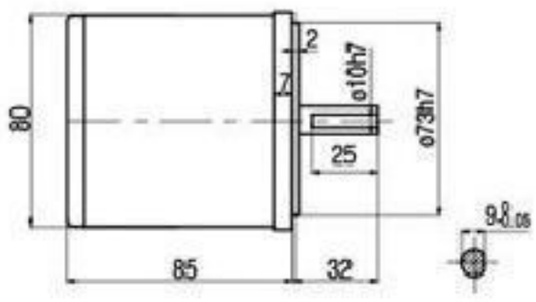

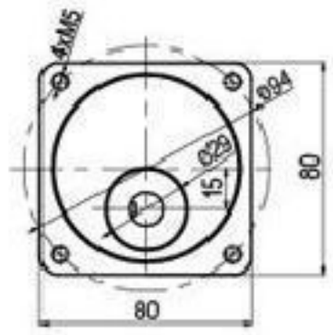

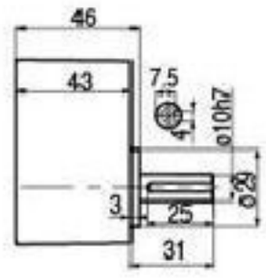

40W

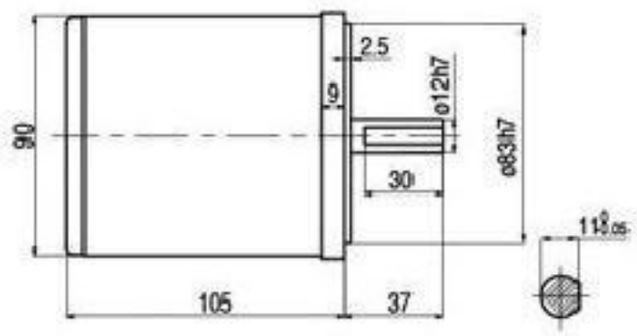

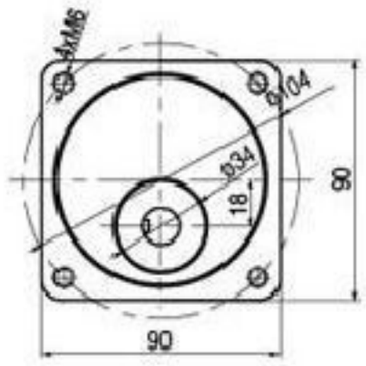

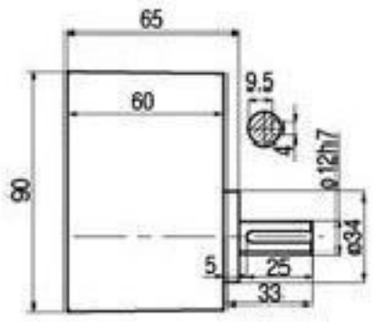

60W

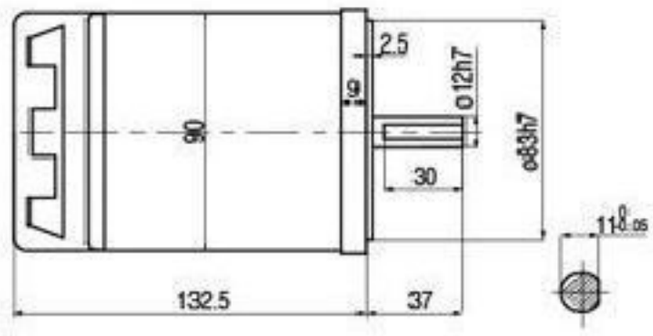

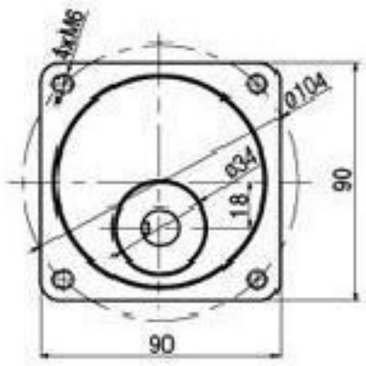

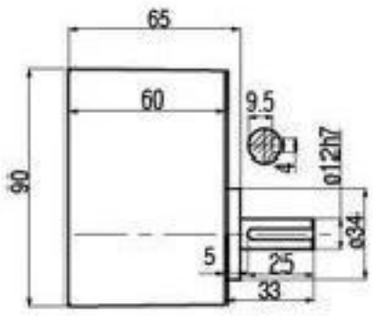

90W-120W

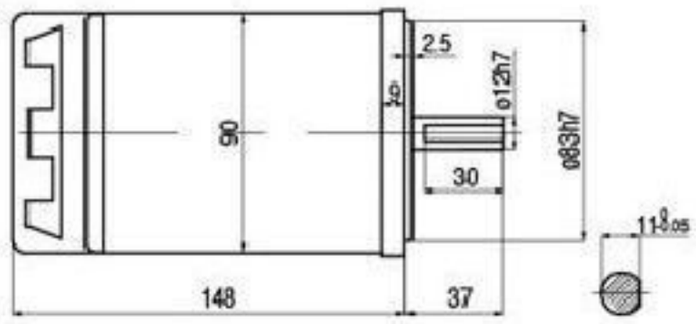

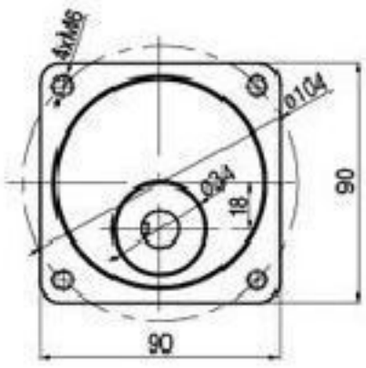

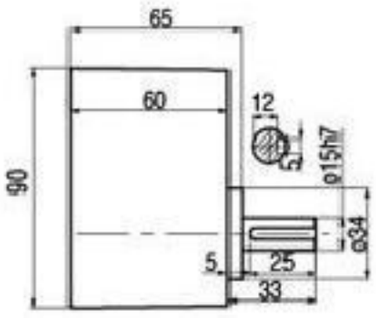

120W-200W

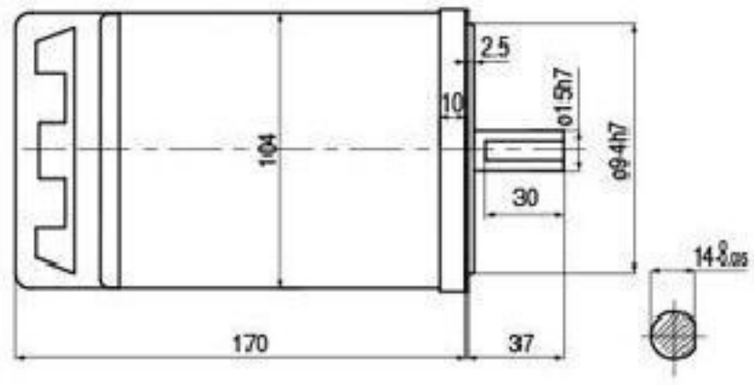

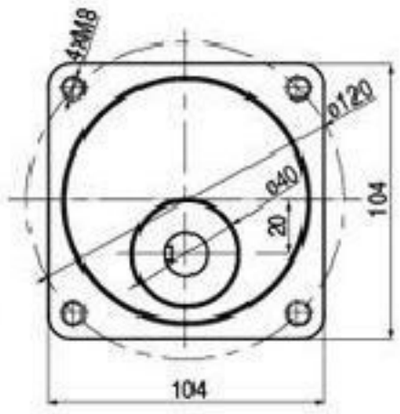

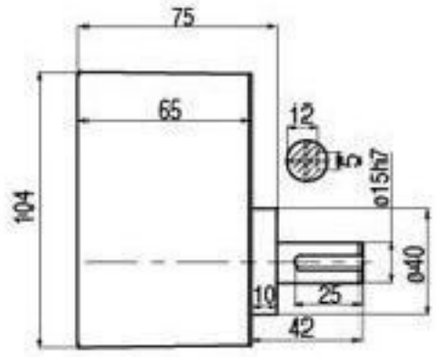

电机特性表 List of Motor Characteristics

型号/类型 Model / Type		额定功率 Rated Power	电压 Voltage	频率 Frequency	极数 Poles	额定转速 Rated Speed	启动转矩 Rated Torque	额定转矩 Rated Current	额定电流 Starting Torque	电容 Capacitor
光轴 Round shaft	齿轴 Pinion shaft	W	V	Hz	P	RPM	MN·M	MN·M	A	μf/450V
3IK15A-A	3IK15GN-A	15	1ph110	50/60	4	1300	0.09	0.11	0.30	6.0
3IK15A-C	3IK15GN-C	15	1ph220	50/60	4	1300	0.10	0.11	0.14	1.5
3IK15A-S	3IK15GN-S	15	3ph220	50/60	4	1300	0.12	0.13	0.16	/
4IK25A-A	4IK25GN-A	25	1ph110	50/60	4	1350	0.18	0.18	0.39	6.0
4IK25A-C	4IK25GN-C	25	1ph220	50/60	4	1350	0.18	0.18	0.22	2.0
4IK25A-S	4IK25GN-S	25	3ph220	50/60	4	1300	0.19	0.19	0.25	/
4IK25A-S_3	4IK25GN-S_3	25	3ph380	50/60	4	1300	0.19	0.19	0.14	/
5IK40A1-A	5IK40GN-A	40	1ph110	50/60	4	1350	0.25	0.29	0.64	10.0
5IK40A1-C	5IK40GN-C	40	1ph220	50/60	4	1350	0.28	0.29	0.29	2.5
5IK40A1-S	5IK40GN-S	40	3ph220	50/60	4	1300	1.15	0.29	0.38	/
5IK40A1-S_3	5IK40GN-S_3	40	3ph380	50/60	4	1300	1.15	0.29	0.22	/
5IK60A1-AF	5IK60GN-AF	60	1ph110	50/60	4	1350	0.38	0.44	0.98	12.0
5IK60A1-CF	5IK60GN-CF	60	1ph220	50/60	4	1350	0.40	0.44	0.43	3.5
5IK60A1-SF	5IK60GN-SF	60	3ph220	50/60	4	1350	1.70	0.46	0.49	/
5IK60A1-S_3F	5IK60GN-S_3F	60	3ph380	50/60	4	1350	1.70	0.46	0.28	/
5IK90A1-AF	5IK90GU-AF	90	1ph110	50/60	4	1350	0.50	0.64	1.40	18.0
5IK90A1-CF	5IK90GU-CF	90	1ph220	50/60	4	1350	0.48	0.64	0.59	5.0
5IK90A1-SF	5IK90GU-SF	90	3ph220	50/60	4	1300	2.40	0.66	0.66	/
5IK90A1-S_3F	5IK90GU-S_3F	90	3ph380	50/60	4	1300	2.40	0.66	0.28	/
5IK120A1-AF	5IK120GU-AF	120	1ph110	50/60	4	1250	0.65	0.9	1.80	18.0
5IK120A1-CF	5IK120GU-CF	120	1ph220	50/60	4	1300	0.75	0.87	0.82	6.5
5IK120A1-SF	5IK120GU-SF	120	3ph220	50/60	4	1300	3.20	0.87	0.83	/
5IK120A1-S_3F	5IK120GU-S_3F	120	3ph380	50/60	4	1300	3.20	0.87	0.40	/
5IK180A1-AF	5IK180GU-AF	180	1ph110	50/60	4	1250	0.97	1.27	2.40	30.0
5IK180A1-CF	5IK180GU-CF	180	1ph220	50/60	4	1300	1.12	1.23	1.21	12.0
5IK180A1-SF	5IK180GU-SF	180	3ph220	50/60	4	1300	4.50	1.23	0.83	/
5IK180A1-S_3F	5IK180GU-S_3F	180	3ph380	50/60	4	1300	4.50	1.23	0.59	/
6IK120A1-AF	6IK120GU-AF	120	1ph110	50/60	4	1350	0.59	0.85	1.90	30.0
6IK120A1-CF	6IK120GU-CF	120	1ph220	50/60	4	1350	0.75	0.85	0.86	8.0
6IK120A1-SF	6IK120GU-SF	120	3ph220	50/60	4	1350	3.50	0.85	0.89	/
6IK120A1-S_3F	6IK120GU-S_3F	120	3ph380	50/60	4	1350	3.50	0.85	0.51	/
6IK140A1-AF	6IK140GU-AF	140	1ph110	50/60	4	1350	0.90	0.99	2.00	30.0
6IK140A1-CF	6IK140GU-CF	140	1ph220	50/60	4	1350	0.90	0.99	0.91	8.0
6IK140A1-SF	6IK140GU-SF	140	3ph220	50/60	4	1350	3.50	0.99	0.95	/
6IK140A1-S_3F	6IK140GU-S_3F	140	3ph380	50/60	4	1350	3.50	0.99	0.55	/
6IK180A1-AF	6IK180GU-AF	180	1ph110	50/60	4	1350	1.20	1.25	2.30	30.0
6IK180A1-CF	6IK180GU-CF	180	1ph220	50/60	4	1350	1.20	1.25	1.17	10.0
6IK180A1-SF	6IK180GU-SF	180	3ph220	50/60	4	1350	4.60	1.25	0.95	/
6IK180A1-S_3F	6IK180GU-S_3F	180	3ph380	50/60	4	1350	4.60	1.25	0.55	/
6IK200A1-AF	6IK200GU-AF	200	1ph110	50/60	4	1350	1.30	1.32	2.50	30.0
6IK200A1-CF	6IK200GU-CF	200	1ph220	50/60	4	1350	1.30	1.32	1.23	10.0
6IK200A1-SF	6IK200GU-SF	200	3ph220	50/60	4	1350	4.60	1.32	0.95	/
6IK200A1-S_3F	6IK200GU-S_3F	200	3ph380	50/60	4	1350	4.60	1.32	0.55	/

●使用电压不同，电容容量也不相同。故应与使用电压相对应，正确使用。●不能正确使用是造成故障的主要原因。订货时，在确认使用电压后，选择正确的型号进行订货。
●The capacitor capacitance will be different under different voltage. A correct capacitor capacitance is required to match the applied voltage. ●Wrong capacitor capacitance is the cause of trouble. You must confirm a correct voltage and select a correct model when your purchase order is placed.

装有减速机时的容许转矩 allowable torque with gearbox

50Hz电机 单位: kgf.cm/N.m

转速Output Shaft Speed		500	417	300	250	200	166	150	120	100	83	75	60	50	41	37	30	25	20	16	15	12	10	8	7.5
减速比Reduction Ratio		3	3.6	5	6	7.5	9	10	12.5	15	18	20	25	30	36	40	50	60	75	90	100	120	150	180	200
3IK15GN-□	3GN□K	3.2	3.9	5.4	6.5	8.1	9.7	10.8	13.5	16.2	19.4	19.4	24.2	29.1	34.9	38.8	43.6	50.0	50.0	50.0	50.0	50.0	50.0	50.0	50.0
		0.314	0.382	0.530	0.637	0.794	0.951	1.059	1.324	1.587	1.902	1.902	2.373	2.854	3.423	3.805	4.276	4.90	4.90	4.90	4.90	4.90	4.90	4.90	4.90
4IK25GN-□	4GN□K	5.3	6.4	8.9	10.7	13.4	16.0	17.8	22.3	26.7	32.1	32.1	40.2	48.2	57.8	64.2	72.6	80.0	80.0	80.0	80.0	80.0	80.0	80.0	80.0
		0.519	0.627	0.872	1.049	1.313	1.568	1.744	2.185	2.617	3.146	3.146	3.940	4.724	5.664	6.292	7.115	7.84	7.84	7.84	7.84	7.84	7.84	7.84	7.84
5IK40GN-□	5GN□K	8.3	9.9	13.8	16.5	20.7	24.8	27.5	34.4	41.3	49.6	62.1	74.5	89.4	99.3	100.0	100.0	100.0	100.0	100.0	100.0	100.0	100.0	100.0	100.0
		0.813	0.970	1.352	1.617	2.029	2.430	2.695	3.371	4.047	4.861	4.861	6.086	7.301	8.761	9.731	9.80	9.80	9.80	9.80	9.80	9.80	9.80	9.80	9.80
5IK60GN-□	5GN□K	12.2	14.6	20.3	24.3	30.4	36.5	40.5	45.6	54.8	65.7	73.0	82.5	99.0	119.0	132.0	165.0	198.0	200.0	200.0	200.0	200.0	200.0	200.0	200.0
		1.196	1.431	1.989	2.381	2.989	3.577	3.969	4.469	5.370	6.439	7.154	8.085	9.702	11.66	12.94	16.17	19.40	19.60	19.60	19.60	19.60	19.60	19.60	19.60
5IK90GU-□	5GU□K	18.2	21.9	30.4	36.5	45.6	54.7	60.8	68.4	82.1	98.6	110.0	124.0	149.0	178.0	198.0	200.0	200.0	200.0	200.0	200.0	200.0	200.0	200.0	200.0
		1.784	2.145	2.979	3.577	4.469	5.361	5.958	6.703	8.046	9.663	10.78	12.15	14.60	17.44	19.40	19.60	19.60	19.60	19.60	19.60	19.60	19.60	19.60	19.60
5IK120GU-□	5GU□K	23.2	27.8	38.7	46.4	58.0	69.6	77.4	87.0	104.0	125.0	139.0	156.0	188.0	200.0	200.0	200.0	200.0	200.0	200.0	200.0	200.0	200.0	200.0	200.0
		2.276	2.731	3.793	4.552	5.689	6.827	7.586	8.534	10.24	12.29	13.65	15.36	18.43	19.61	19.61	19.61	19.61	19.61	19.61	19.61	19.61	19.61	19.61	19.61
5IK180GU-□	5GU□K	34.0	41.0	57.0	68.0	85.1	102.0	113.0	128.0	153.0	184.0	204.0	230.0	278.0	300.0	300.0	300.0	300.0	300.0	300.0	300.0	300.0	300.0	300.0	300.0
		3.336	4.021	5.590	6.672	8.341	10.01	11.12	12.55	15.01	18.04	20.02	22.56	27.26	29.42	29.42	29.42	29.42	29.42	29.42	29.42	29.42	29.42	29.42	29.42
6IK120GU-□	6GU□K	21.0	25.3	35.1	42.1	52.6	63.2	63.2	79.1	94.9	114.0	114.0	143.0	171.0	206.0	228.0	286.0	343.0	400.0	400.0	400.0	400.0	400.0	400.0	400.0
		2.06	2.48	3.44	4.13	5.16	6.19	6.19	7.75	9.30	11.20	11.20	14.00	16.80	20.00	22.40	28.00	33.60	39.20	39.20	39.20	39.20	39.20	39.20	39.20
6IK140GU-□	6GU□K	24.1	28.8	40.1	48.1	60.1	72.1	72.1	90.3	108.0	130.0	130.0	163.0	196.0	235.0	261.0	327.0	392.0	400.0	400.0	400.0	400.0	400.0	400.0	400.0
		2.36	2.83	3.93	4.71	5.89	7.07	7.07	8.85	10.60	12.70	12.70	16.00	19.20	23.00	25.60	32.00	38.40	39.20	39.20	39.20	39.20	39.20	39.20	39.20
6IK180GU-□	6GU□K	24.1	28.8	40.1	48.1	60.1	72.1	72.1	90.3	108.0	130.0	130.0	163.0	196.0	235.0	261.0	327.0	392.0	400.0	400.0	400.0	400.0	400.0	400.0	400.00
		2.36	2.83	3.93	4.71	5.89	7.07	7.07	8.85	10.60	12.70	12.70	16.00	19.20	23.00	25.60	32.00	38.40	39.20	39.20	39.20	39.20	39.20	39.20	39.20
6IK200GU-□	6GU□K	24.1	28.8	40.1	48.1	60.1	72.1	72.1	90.3	108.0	130.0	130.0	163.0	196.0	235.0	261.0	327.0	392.0	400.0	400.0	400.0	400.0	400.0	400.0	400.0
		2.36	2.83	3.93	4.71	5.89	7.07	7.07	8.85	10.60	12.70	12.70	16.00	19.20	23.00	25.60	32.00	38.40	39.20	39.20	39.20	39.20	39.20	39.20	39.20

60Hz电机 单位: kgf.cm/N.m

转速Output Shaft Speed		600	500	360	300	240	200	180	144	120	100	90	72	60	50	45	36	30	24	20	18	15	12	10	9
减速比Reduction Ratio		3	3.6	5	6	7.5	9	10	12.5	15	18	20	25	30	36	40	50	60	75	90	100	120	150	180	200
3IK15GN-□	3GN□K	3.0	3.6	5.1	6.1	7.6	9.1	10.1	12.7	15.2	18.2	18.2	22.8	27.3	32.8	36.5	41.0	49.2	50.0	50.0	50.0	50.0	50.0	50.0	50.0
		0.294	0.353	0.500	0.598	0.745	0.892	0.990	1.245	1.491	1.785	1.785	2.236	2.677	3.217	3.579	4.021	4.825	4.90	4.90	4.90	4.90	4.90	4.90	4.90
4IK25GN-□	4GN□K	4.4	5.2	7.3	8.7	10.9	13.1	14.6	18.2	21.9	26.2	26.3	32.9	39.4	47.3	52.6	59.4	71.3	80.0	80.0	80.0	80.0	80.0	80.0	80.0
		0.431	0.510	0.715	0.853	1.068	1.284	1.431	1.784	2.146	2.568	2.577	3.224	3.861	4.635	5.155	5.821	6.987	7.84	7.84	7.84	7.84	7.84	7.84	7.84
5IK40GN-□	5GN□K	6.8	8.2	11.3	13.6	17.0	20.4	22.7	28.4	34.0	40.8	40.9	51.1	61.3	73.6	81.8	100.0	100.0	100.0	100.0	100.0	100.0	100.0	100.0	100.0
		0.666	0.804	1.107	1.333	1.666	1.999	2.225	2.783	3.332	3.998	4.008	5.008	6.007	7.213	8.016	9.800	9.800	9.800	9.800	9.800	9.800	9.800	9.800	9.800
5IK60GN-□	5GN□K	9.7	11.7	16.2	19.4	24.3	29.2	32.4	36.5	43.8	52.6	58.4	66.0	79.2	95.0	106.0	132.0	158.0	177.0	200.0	200.0	200.0	200.0	200.0	200.0
		0.953	1.147	1.588	1.901	2.381	2.862	3.175	3.577	4.292	5.155	5.726	6.648	7.762	9.31	10.39	12.94	15.48	17.35	19.60	19.60	19.60	19.60	19.60	19.60
5IK90GU-□	5GU□K	14.6	17.5	24.3	29.2	36.5	43.7	48.6	54.8	65.7	78.8	87.6	99.0	119.0	143.0	158.0	198.0	200.0	200.0	200.0	200.0	200.0	200.0	200.0	200.0
		1.431	1.715	2.381	2.862	3.577	4.675	4.763	5.370	6.439	7.722	8.585	9.702	11.66	14.01	15.48	19.40	19.60	19.60	19.60	19.60	19.60	19.60	19.60	19.60
5IK120GU-□	5GU□K	18.7	22.5	31.2	37.4	46.8	56.1	62.4	70.2	84.2	101.0	112.0	126.0	152.0	182.0	200.0	200.0	200.0	200.0	200.0	200.0	200.0	200.0	200.0	200.0
		1.835	2.202	3.058	3.670	4.587	5.505	6.116	6.881	8.257	9.909	11.01	12.39	14.86	17.84	19.61	19.61	19.61	19.61	19.61	19.61	19.61	19.61	19.61	19.61
5IK180GU-□	5GU□K	28.1	34.0	47.0	57.0	71.0	84.2	94.0	105.0	126.0	152.0	168.0	189.0	227.0	273.0	300.0	300.0	300.0	300.0	300.0	300.0	300.0	300.0	300.0	300.0
		2.756	3.334	4.609	5.590	6.963	8.257	9.218	10.30	12.39	14.91	16.51	18.58	22.29	26.75	29.42	29.42	29.42	29.42	29.42	29.42	29.42	29.42	29.42	29.42
6IK120GU-□	6GU□K	17.8	21.3	29.6	35.5	44.4	53.3	53.3	69.7	80.0	96.1	96.1	121.0	146.0	174.0	193.0	241.0	289.0	362.0	400.0	400.0	400.0	400.0	400.0	400.0
		1.74	2.09	2.90	3.48	4.35	5.22	5.22	6.54	7.85	9.42	9.42	11.80	14.20	17.00	18.90	23.60	28.40	35.50	39.20	39.20	39.20	39.20	39.20	39.20
6IK140GU-□	6GU□K	20.7	24.9	34.6	41.2	51.8	62.1	62.1	77.6	93.4	112.0	112.0	141.0	169.0	203.0	226.0	282.0	338.0	400.0	400.0	400.0	400.0	400.0	400.0	400.0
		2.03	2.44	3.39	4.06	5.08	6.09	6.09	7.60	9.15	11.00	11.00	13.80	16.60	19.90	22.10	27.60	33.10	39.20	39.20	39.20	39.20	39.20	39.20	39.20
6IK180GU-□	6GU□K	20.7	24.9	34.6	41.2	51.8	62.1	62.1	77.6	93.4	112.0	112.0	141.0	169.0	203.0	226.0	282.0	338.0	400.0	400.0	400.0	400.0	400.0	400.0	400.0
		2.03	2.44	3.39	4.06	5.08	6.09	6.09	7.60	9.15	11.00	11.00	13.80	16.60	19.90	22.10	27.60	33.10	39.20	39.20	39.20	39.20	39.20	39.20	39.20
6IK200GU-□	6GU□K	20.7	24.9	34.6	41.2	51.8	62.1	62.1	77.6	93.4	112.0	112.0	141.0	203.0	226.0	282.0	338.0	400.0	400.0	400.0	400.0	400.0	400.0	400.0	400.0
		2.03	2.44	3.39	4.06	5.08	6.09	6.09	7.60	9.15	11.00	11.00	13.80	16.60	19.90	22.10	27.60	33.10	39.20	39.20	39.20	39.20	39.20	39.20	39.20

五星减速机
WUXING JIANSUJI

感应电机·2极·高速型电机特性表 Induction Motors 2-Poles·High Speed List of Motor Characteristics

型号/类型 Model / Type		额定功率 Rated Power	电压 Voltage	频率 Frequency	极数 Poles	额定转速 Rated Speed	启动转矩 Rated Torque	额定转矩 Rated Current	额定电流 Starting Torque	电容 Capacitor
光轴 Round shaft	齿轮 Pinion shaft	W	V	Hz	P	RPM	MN·M	MN·M	A	μf/450V
3IK15A-B	3IK15GN-B	15	1ph110	50/60	2	2800	0.07	0.05	0.36	6
3IK15A-D	3IK15GN-D	15	1ph220	50/60	2	3100	0.08	0.06	0.17	1.5
4IK25A-B	4IK25GN-B	25	1ph110	50/60	2	2800	0.09	0.09	0.65	10
4IK25A-D	4IK25GN-D	25	1ph220	50/60	2	3100	0.09	0.09	0.27	2.5
5IK40A1-B	5IK40GN-B	40	1ph110	50/60	2	2800	0.12	0.14	0.8	12
5IK40A1-D	5IK40GN-D	40	1ph220	50/60	2	3200	0.13	0.15	0.34	3
5IK60A1-BF	5IK60GN-BF	60	1ph110	50/60	2	2800	0.17	0.21	1.05	15
5IK60A1-DF	5IK60GN-D	60	1ph220	50/60	2	3200	0.25	0.21	0.56	3.5
5IK90A1-BF	5IK90GU-BF	90	1ph110	50/60	2	2800	0.28	0.34	1.44	25
5IK90A1-DF	5IK90GU-DF	90	1ph220	50/60	2	3200	0.34	0.3	0.79	6
5IK120A1-BF	5IK120GU-BF	120	1ph110	50/60	2	2800	0.33	0.45	2.25	30
5IK120A1-DF	5IK120GU-DF	120	1ph220	50/60	2	3200	0.51	0.4	1.2	8

●使用电压不同，电容容量也不相同。故应与使用电压相对应，正确使用。●不能正确使用是造成故障的主要原因。订货时，在确认使用电压后，选择正确的型号进行订货。
●The capacitor capacitance will be different under different voltage. A correct capacitor capacitance is required to match the applied voltage. ●Wrong capacitor capacitance is the cause of trouble. You must confirm a correct voltage and select a correct model when your purchase order is placed.

外形尺寸 Overall Dimension

15W

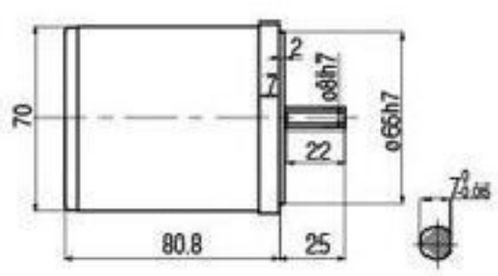

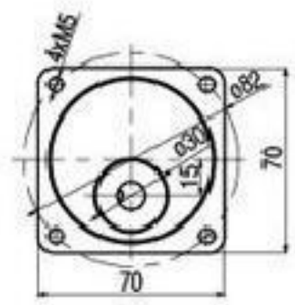

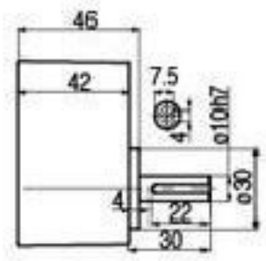

25W

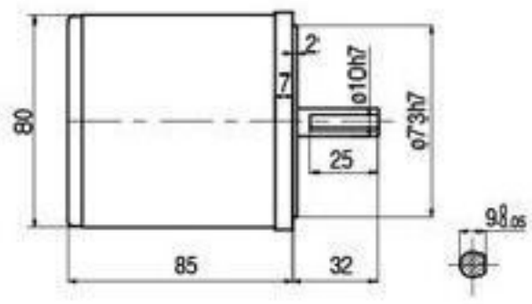

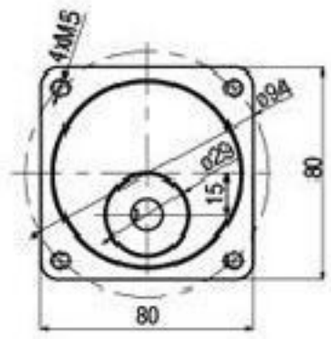

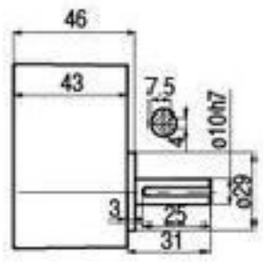

40W

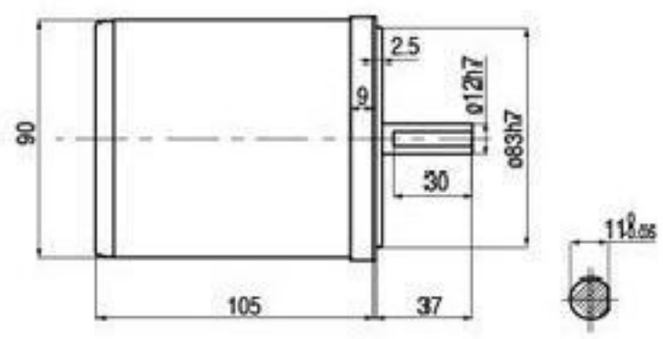

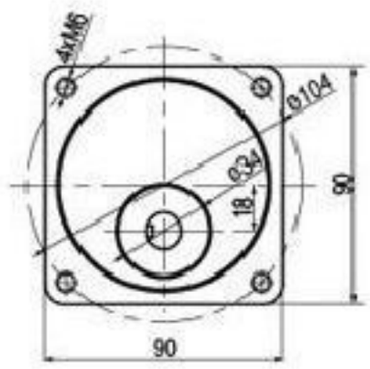

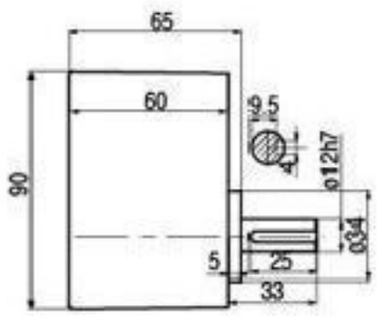

60W

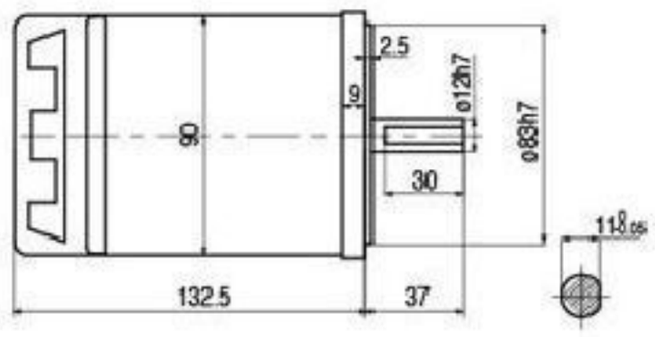

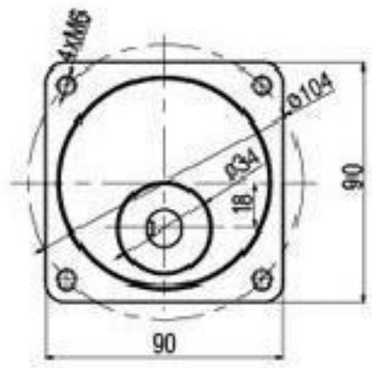

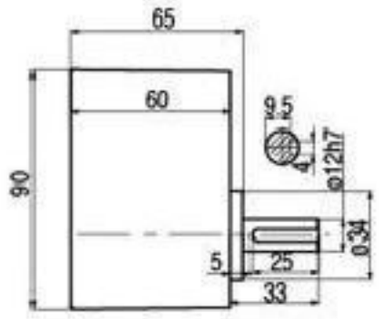

90W-120W

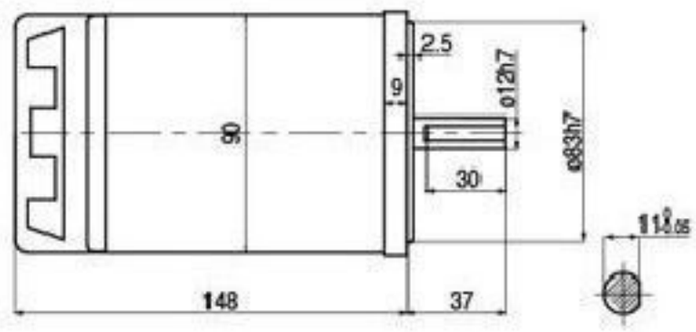

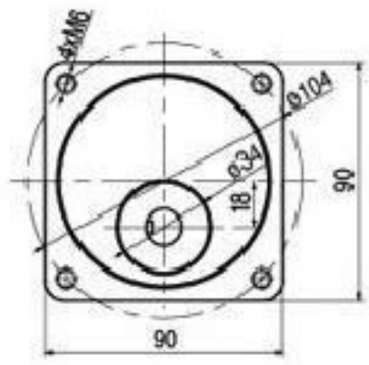

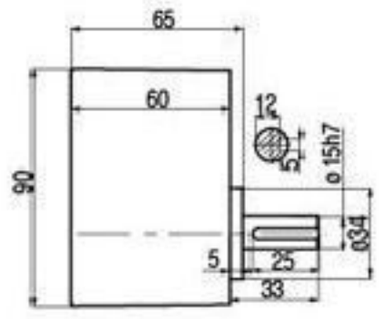

五星减速机
WUXING JIANSUJI

电机特性表 List of Motor Characteristics

型号/类型 Model / Type		额定功率 Rated Power	电压 Voltage	频率 Frequency	极数 Poles	额定转速 Rated Speed	启动转矩 Rated Torque	额定转矩 Rated Current	额定电流 Starting Torque	电容 Capacitor
光轴 Round shaft	齿轴 Pinion shaft	W	V	Hz	P	RPM	MN·M	MN·M	A	μf/450V
3RK15A-A	3RK15GN-A	15	1ph110	50/60	4	1300	0.12	0.11	0.32	6.0
3RK15A-C	3RK15GN-C	15	1ph220	50/60	4	1300	0.12	0.11	0.17	1.5
4RK25A-A	4RK25GN-A	25	1ph110	50/60	4	1350	0.17	0.18	0.42	6.0
4RK25A-C	4RK25GN-C	25	1ph220	50/60	4	1350	0.20	0.18	0.28	2.0
5RK40A1-A	5RK40GN-A	40	1ph110	50/60	4	1350	0.30	0.29	0.68	12.0
5RK40A1-C	5RK40GN-C	40	1ph220	50/60	4	1350	0.30	0.29	0.35	3.0
5RK60A1-AF	5RK60GN-AF	60	1ph110	50/60	4	1350	0.45	0.44	1.10	12.0
5RK60A1-CF	5RK60GN-CF	60	1ph220	50/60	4	1350	0.45	0.44	0.46	3.5
5RK90A1-AF	5RK90GU-AF	90	1ph110	50/60	4	1350	0.48	0.64	1.55	18.0
5RK90A1-CF	5RK90GU-CF	90	1ph220	50/60	4	1350	0.61	0.64	0.65	5.0
5RK120A1-AF	5RK120GU-AF	120	1ph110	50/60	4	1250	0.78	0.90	2.10	18.0
5RK120A1-CF	5RK120GU-CF	120	1ph220	50/60	4	1300	0.85	0.87	1.10	6.5

●使用电压不同，电容容量也不相同。故应与使用电压相对应，正确使用。●不能正确使用是造成故障的主要原因。订货时，在确认使用电压后，选择正确的型号进行订货。
●The capacitor capacitance will be different under different voltage. A correct capacitor capacitance is required to match the applied voltage. ●Wrong capacitor capacitance is the cause of trouble. You must confirm a correct voltage and select a correct model when your purchase order is placed.

装有减速机时的容许转矩 allowable torque with gearbox

50Hz电机 单位: kgf.cm/N.m

转速Output Shaft Speed		500	417	300	250	200	166	150	120	100	83	75	60	50	41	37	30	25	20	16	15	12	10	8	7.5
减速比Reduction Ratio		3	3.6	5	6	7.5	9	10	12.5	15	18	20	25	30	36	40	50	60	75	90	100	120	150	180	200
3RK15GN-□	3GN□K	3.2	3.9	5.4	6.5	8.1	9.7	10.8	13.5	16.2	19.4	19.4	24.2	29.1	34.9	38.8	43.6	50.0	50.0	50.0	50.0	50.0	50.0	50.0	50.0
		0.314	0.382	0.530	0.637	0.794	0.951	1.059	1.324	1.587	1.902	1.902	2.373	2.854	3.423	3.805	4.276	4.90	4.90	4.90	4.90	4.90	4.90	4.90	4.90
4RK25GN-□	4GN□K	5.3	6.4	8.9	10.7	13.4	16.0	17.8	22.3	26.7	32.1	32.1	40.2	48.2	57.8	64.2	72.6	80.0	80.0	80.0	80.0	80.0	80.0	80.0	80.0
		0.519	0.627	0.872	1.049	1.313	1.568	1.744	2.185	2.617	3.146	3.146	3.940	4.724	5.664	6.292	7.115	7.84	7.84	7.84	7.84	7.84	7.84	7.84	7.84
5RK40GN-□	5GN□K	8.3	9.9	13.8	16.5	20.7	24.8	27.5	34.4	41.3	49.6	62.1	74.5	89.4	99.3	100.0	100.0	100.0	100.0	100.0	100.0	100.0	100.0	100.0	100.0
		0.813	0.970	1.352	1.617	2.029	2.430	2.695	3.371	4.047	4.861	4.861	6.086	7.301	8.761	9.731	9.80	9.80	9.80	9.80	9.80	9.80	9.80	9.80	9.80
5RK60GN-□	5GN□K	12.2	14.6	20.3	24.3	30.4	36.5	40.5	45.6	54.8	65.7	73.0	82.5	99.0	119.0	132.0	165.0	198.0	200.0	200.0	200.0	200.0	200.0	200.0	200.0
		1.196	1.431	1.989	2.381	2.989	3.577	3.969	4.469	5.370	6.439	7.154	8.085	9.702	11.66	12.94	16.17	19.40	19.60	19.60	19.60	19.60	19.60	19.60	19.60
5RK90GU-□	5GU□K	18.2	21.9	30.4	36.5	45.6	54.7	60.8	68.4	82.1	98.6	110.0	124.0	149.0	178.0	198.0	200.0	200.0	200.0	200.0	200.0	200.0	200.0	200.0	200.0
		1.784	2.145	2.979	3.577	4.469	5.361	5.958	6.703	8.046	9.663	10.78	12.15	14.60	17.44	19.40	19.60	19.60	19.60	19.60	19.60	19.60	19.60	19.60	19.60
5RK120GU-□	5GU□K	23.2	27.8	38.7	46.4	58.0	69.6	77.4	87.0	104.0	125.0	139.0	156.0	188.0	200.0	200.0	200.0	200.0	200.0	200.0	200.0	200.0	200.0	200.0	200.0
		2.276	2.731	3.793	4.552	5.689	6.827	7.586	8.534	10.24	12.29	13.65	15.36	18.43	19.61	19.61	19.61	19.61	19.61	19.61	19.61	19.61	19.61	19.61	19.61

60Hz电机 单位: kgf.cm/N.m

转速Output Shaft Speed		600	500	360	300	240	200	180	144	120	100	90	72	60	50	45	36	30	24	20	18	15	12	10	9
减速比Reduction Ratio		3	3.6	5	6	7.5	9	10	12.5	15	18	20	25	30	36	40	50	60	75	90	100	120	150	180	200
3RK15GN-□	3GN□K	3.0	3.6	5.1	6.1	7.6	9.1	10.1	12.7	15.2	18.2	18.2	22.8	27.3	32.8	36.5	41.0	49.2	50.0	50.0	50.0	50.0	50.0	50.0	50.0
		0.294	0.353	0.500	0.598	0.745	0.892	0.990	1.245	1.491	1.785	1.785	2.236	2.677	3.217	3.579	4.021	4.825	4.90	4.90	4.90	4.90	4.90	4.90	4.90
4RK25GN-□	4GN□K	4.4	5.2	7.3	8.7	10.9	13.1	14.6	18.2	21.9	26.2	26.3	32.9	39.4	47.3	52.6	59.4	71.3	80.0	80.0	80.0	80.0	80.0	80.0	80.0
		0.431	0.510	0.715	0.853	1.068	1.284	1.431	1.784	2.146	2.568	2.577	3.224	3.861	4.635	5.155	5.821	6.987	7.84	7.84	7.84	7.84	7.84	7.84	7.84
5RK40GN-□	5GN□K	6.8	8.2	11.3	13.6	17.0	20.4	22.7	28.4	34.0	40.8	40.9	51.1	61.3	73.6	81.8	100.0	100.0	100.0	100.0	100.0	100.0	100.0	100.0	100.0
		0.666	0.804	1.107	1.333	1.666	1.999	2.225	2.783	3.332	3.998	4.008	5.008	6.007	7.213	8.016	9.800	9.800	9.800	9.800	9.800	9.800	9.800	9.800	9.800
5RK60GN-□	5GN□K	9.7	11.7	16.2	19.4	24.3	29.2	32.4	36.5	43.8	52.6	58.4	66.0	79.2	95.0	106.0	132.0	158.0	177.0	200.0	200.0	200.0	200.0	200.0	200.0
		0.953	1.147	1.588	1.901	2.381	2.862	3.175	3.577	4.292	5.155	5.726	6.648	7.762	9.31	10.39	12.94	15.48	17.35	19.60	19.60	19.60	19.60	19.60	19.60
5RK90GU-□	5GU□K	14.6	17.5	24.3	29.2	36.5	43.7	48.6	54.8	65.7	78.8	87.6	99.0	119.0	143.0	158.0	198.0	200.0	200.0	200.0	200.0	200.0	200.0	200.0	200.0
		1.431	1.715	2.381	2.862	3.577	4.675	4.763	5.370	6.439	7.722	8.585	9.702	11.66	14.01	15.48	19.40	19.60	19.60	19.60	19.60	19.60	19.60	19.60	19.60
5RK120GU-□	5GU□K	18.7	22.5	31.2	37.4	46.8	56.1	62.4	70.2	84.2	101.0	112.0	126.0	152.0	182.0	200.0	200.0	200.0	200.0	200.0	200.0	200.0	200.0	200.0	200.0
		1.835	2.202	3.058	3.670	4.587	5.505	6.116	6.881	8.257	9.909	11.01	12.39	14.86	17.84	19.61	19.61	19.61	19.61	19.61	19.61	19.61	19.61	19.61	19.61

外形尺寸 Overall Dimension

15W

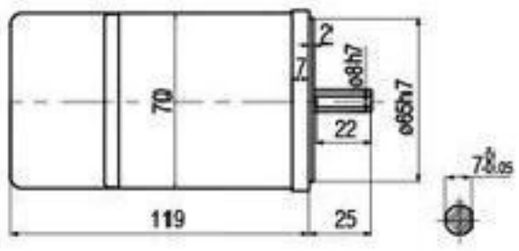

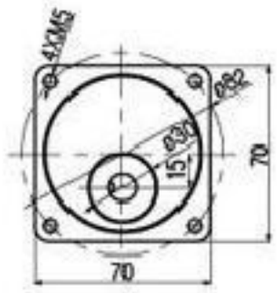

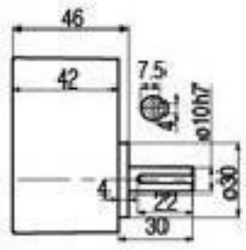

25W

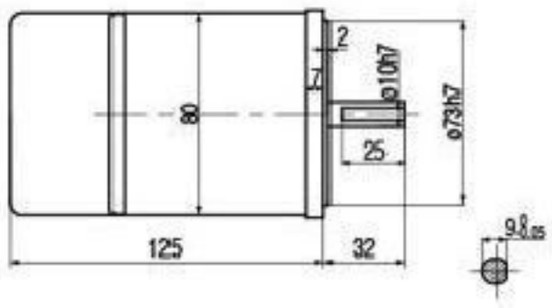

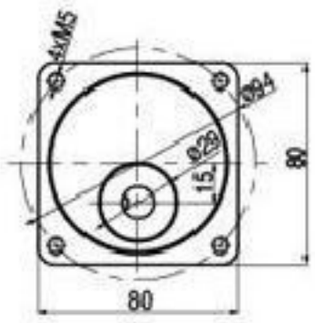

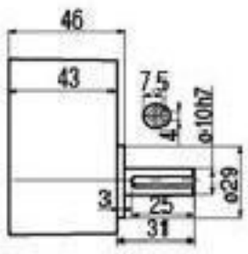

40W

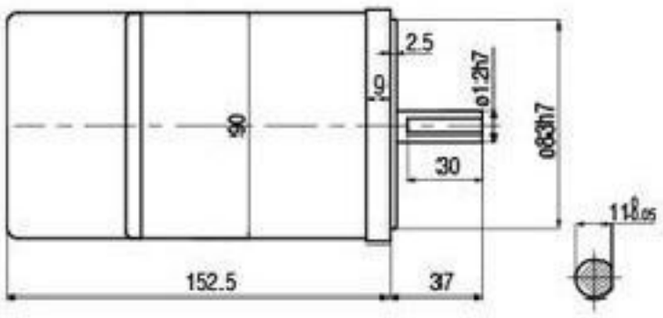

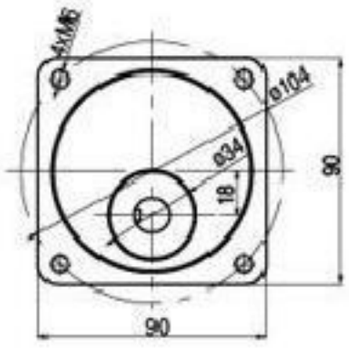

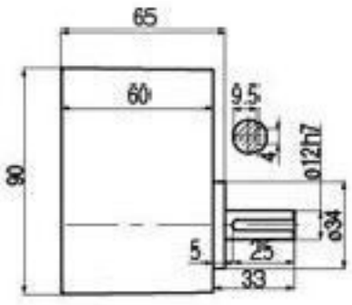

60W

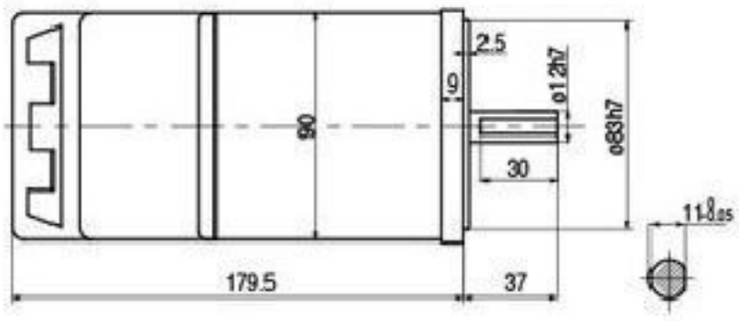

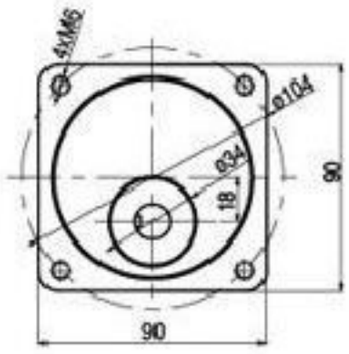

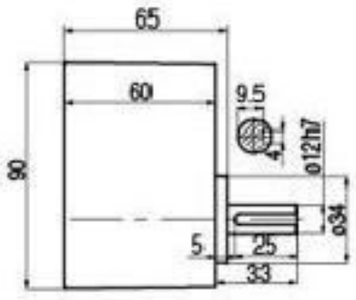

90W-120W

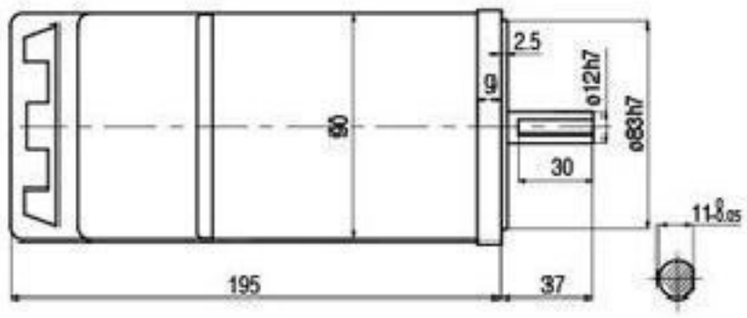

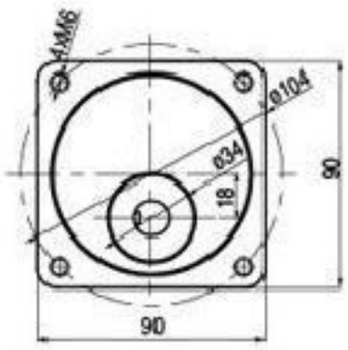

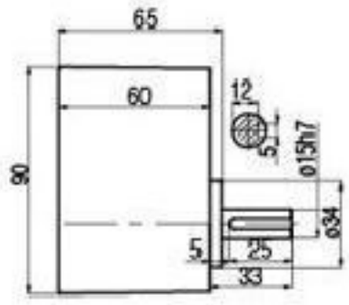

120W-200W

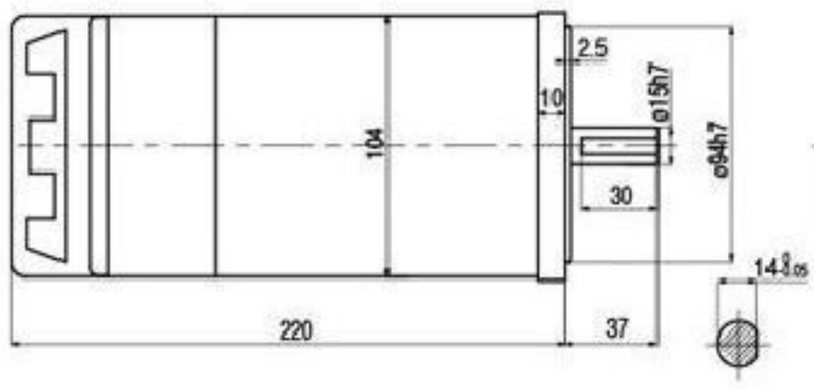

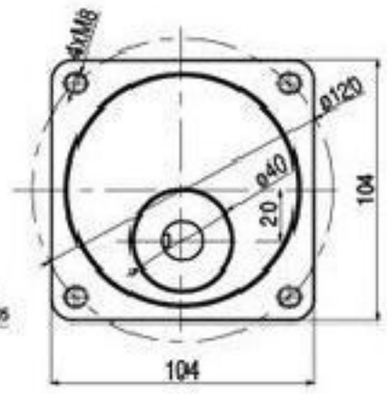

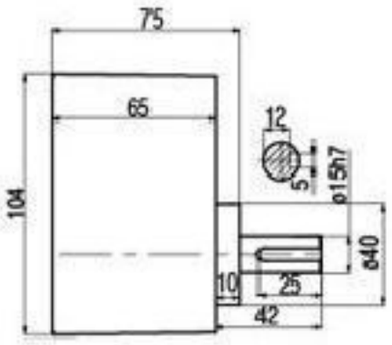

五星减速机
WUXING JIANSUJI

电机特性表 List of Motor Characteristics

型号/类型 Model / Type		额定功率 Rated Power	电压 Voltage	频率 Frequency	极数 Poles	额定转速 Rated Speed	启动转矩 Rated Torque	额定转矩 Rated Current	额定电流 Starting Torque	电容 Capacitor
光轴 Round shaft	齿轴 Pinion shaft	W	V	Hz	P	RPM	MN·M	MN·M	A	μf/450V
3RK15A-AM	3RK15GN-AM	15	1ph110	50/60	4	1300	0.12	0.11	0.32	6.0
3RK15A-CM	3RK15GN-CM	15	1ph220	50/60	4	1300	0.12	0.11	0.17	1.5
3RK15A-SM	3RK15GN-SM	15	3ph220	50/60	4	1300	0.14	0.19	0.13	/
3RK15A-S_3	3RK15GN-S_3	15	3ph380	50/60	4	1300	0.14	0.18	0.11	/
4RK25A-AM	4RK25GN-AM	25	1ph110	50/60	4	1350	0.17	0.18	0.43	6.0
4RK25A-CM	4RK25GN-CM	25	1ph220	50/60	4	1350	0.14	0.18	0.24	2.0
4RK25A-SM	4RK25GN-SM	25	3ph220	50/60	4	1300	0.52	0.19	0.25	/
4RK25A-S_3M	4RK25GN-S_3M	25	3ph380	50/60	4	1300	0.52	0.19	0.14	/
5RK40A1-AM	5RK40GN-AM	40	1ph110	50/60	4	1350	0.30	0.29	0.68	12.0
5RK40A1-CM	5RK40GN-CM	40	1ph220	50/60	4	1350	0.30	0.29	0.35	2.5
5RK40A1-SM	5RK40GN-SM	40	3ph220	50/60	4	1300	1.15	0.29	0.38	/
5RK40A1-S_3M	5RK40GN-S_3M	40	3ph380	50/60	4	1300	1.15	0.29	0.22	/
5RK60A1-AFM	5RK60GN-AFM	60	1ph110	50/60	4	1350	0.45	0.44	1.10	12.0
5RK60A1-CFM	5RK60GN-CFM	60	1ph220	50/60	4	1350	0.45	0.44	0.45	3.5
5RK60A1-SFM	5RK60GN-SFM	60	3ph220	50/60	4	1350	1.70	0.46	0.49	/
5RK60A1-S_3FM	5RK60GN-S_3FM	60	3ph380	50/60	4	1350	1.70	0.46	0.28	/
5RK90A1-AFM	5RK90GU-AFM	90	1ph110	50/60	4	1350	0.48	0.64	1.55	18.0
5RK90A1-CFM	5RK90GU-CFM	90	1ph220	50/60	4	1350	0.48	0.64	0.59	5.0
5RK90A1-SFM	5RK90GU-SFM	90	3ph220	50/60	4	1350	2.30	0.66	0.66	/
5RK90A1-S_3FM	5RK90GU-S_3FM	90	3ph380	50/60	4	1350	2.30	0.66	0.28	/
5RK120A1-AFM	5RK120GU-AFM	120	1ph110	50/60	4	1300	0.78	0.90	2.10	18.0
5RK120A1-CFM	5RK120GU-CFM	120	1ph220	50/60	4	1300	0.75	0.87	0.92	6.5
5RK120A1-SFM	5RK120GU-SFM	120	3ph220	50/60	4	1300	3.00	0.87	0.86	/
5RK120A1-S_3FM	5RK120GU-S_3FM	120	3ph380	50/60	4	1300	3.00	0.87	0.51	/
5RK180A1-AFM	5RK180GU-AFM	180	1ph110	50/60	4	1350	0.97	1.27	2.40	30.0
5RK180A1-CFM	5RK180GU-CFM	180	1ph220	50/60	4	1350	1.12	1.23	1.21	12.0
5RK180A1-SFM	5RK180GU-SFM	180	3ph220	50/60	4	1350	4.50	1.23	0.83	/
5RK180A1-S_3FM	5RK180GU-S_3FM	180	3ph380	50/60	4	1350	4.50	1.23	0.59	/
6RK120A1-AFM	6RK120GU-AFM	120	1ph110	50/60	4	1350	0.59	0.85	1.90	30.0
6RK120A1-CFM	6RK120GU-CFM	120	1ph220	50/60	4	1350	0.75	0.85	0.88	8.0
6RK120A1-SFM	6RK120GU-SFM	120	3ph220	50/60	4	1350	3.50	0.85	0.89	/
6RK120A1-S_3FM	6RK120GU-S_3FM	120	3ph380	50/60	4	1350	3.50	0.85	0.51	/
6RK140A1-AFM	6RK140GU-AFM	140	1ph110	50/60	4	1350	0.90	0.99	2.00	30.0
6RK140A1-CFM	6RK140GU-CFM	140	1ph220	50/60	4	1350	0.90	0.099	1.13	8.0
6RK140A1-SFM	6RK140GU-SFM	140	3ph220	50/60	4	1350	3.50	0.99	0.95	/
6RK140A1-S_3FM	6RK140GU-S_3FM	140	3ph380	50/60	4	1350	3.50	0.99	0.55	/
6RK180A1-AFM	6RK180GU-AFM	180	1ph110	50/60	4	1350	0.63	1.25	1.90	30.0
6RK180A1-CFM	6RK180GU-CFM	180	1ph220	50/60	4	1350	0.81	1.25	1.17	10.0
6RK180A1-SFM	6RK180GU-SFM	180	3ph220	50/60	4	1350	4.60	1.25	0.89	/
6RK180A1-S_3FM	6RK180GU-S_3FM	180	3ph380	50/60	4	1350	4.60	1.25	0.51	/
6RK200A1-AFM	6RK200GU-AFM	200	1ph110	50/60	4	1350	1.32	1.32	2.80	30.0
6RK200A1-CFM	6RK200GU-CFM	200	1ph220	50/60	4	1350	1.32	1.32	1.25	10.0
6RK200A1-SFM	6RK200GU-SFM	200	3ph220	50/60	4	1350	4.70	1.32	0.95	/
6RK200A1-S_3FM	6RK200GU-S_3FM	200	3ph380	50/60	4	1350	4.70	1.32	0.55	/

五星减速机
WUXING JIANSUJI

装有减速机时的容许转矩 allowable torque with gearbox

50Hz电机 单位: kgf.cm/N.m

转速Output Shaft Speed		500	417	300	250	200	166	150	120	100	83	75	60	50	41	37	30	25	20	16	15	12	10	8	7.5
减速比Reduction Ratio		3	3.6	5	6	7.5	9	10	12.5	15	18	20	25	30	36	40	50	60	75	90	100	120	150	180	200
3RK15GN-□	3GN□K	3.4	4.1	5.7	6.8	8.5	10.2	11.3	14.2	17	20.4	20.4	25.6	30.7	36.8	40.9	46.2	55.4	69.2	80	80	80	80	80	80
		0.333	0.402	0.559	0.666	0.833	1	1.107	1.392	1.666	1.999	1.999	2.509	3.009	3.606	4.008	4.53	5.423	6.786	7.84	7.84	7.84	7.84	7.84	7.84
4RK25GN-□	4GN□K	5.3	6.4	8.9	10.7	13.4	16.0	17.8	22.3	26.7	32.1	32.1	40.2	48.2	57.8	64.2	72.6	80.0	80.0	80.0	80.0	80.0	80.0	80.0	80.0
		0.519	0.627	0.872	1.049	1.313	1.568	1.744	2.185	2.617	3.146	3.146	3.940	4.724	5.664	6.292	7.115	7.84	7.84	7.84	7.84	7.84	7.84	7.84	7.84
5RK40GN-□	5GN□K	8.3	9.9	13.8	16.5	20.7	24.8	27.5	34.4	41.3	49.6	62.1	74.5	89.4	99.3	100.0	100.0	100.0	100.0	100.0	100.0	100.0	100.0	100.0	100.0
		0.813	0.970	1.352	1.617	2.029	2.430	2.695	3.371	4.047	4.861	4.861	6.086	7.301	8.761	9.731	9.80	9.80	9.80	9.80	9.80	9.80	9.80	9.80	9.80
5RK60GN-□	5GN□K	12.2	14.6	20.3	24.3	30.4	36.5	40.5	45.6	54.8	65.7	73.0	82.5	99.0	119.0	132.0	165.0	198.0	200.0	200.0	200.0	200.0	200.0	200.0	200.0
		1.196	1.431	1.989	2.381	2.989	3.577	3.969	4.469	5.370	6.439	7.154	8.085	9.702	11.66	12.94	16.17	19.40	19.60	19.60	19.60	19.60	19.60	19.60	19.60
5RK90GU-□	5GU□K	18.2	21.9	30.4	36.5	45.6	54.7	60.8	68.4	82.1	98.6	110.0	124.0	149.0	178.0	198.0	200.0	200.0	200.0	200.0	200.0	200.0	200.0	200.0	200.0
		1.784	2.145	2.979	3.577	4.469	5.361	5.958	6.703	8.046	9.663	10.78	12.15	14.60	17.44	19.40	19.60	19.60	19.60	19.60	19.60	19.60	19.60	19.60	19.60
5RK120GU-□	5GU□K	23.2	27.8	38.7	46.4	58.0	69.6	77.4	87.0	104.0	125.0	139.0	156.0	188.0	200.0	200.0	200.0	200.0	200.0	200.0	200.0	200.0	200.0	200.0	200.0
		2.276	2.731	3.793	4.552	5.689	6.827	7.586	8.534	10.24	12.29	13.65	15.36	18.43	19.61	19.61	19.61	19.61	19.61	19.61	19.61	19.61	19.61	19.61	19.61
5RK180GU-□	5GU□K	34.0	41.0	57.0	68.0	85.1	102.0	113.0	128.0	153.0	184.0	204.0	230.0	278.0	300.0	300.0	300.0	300.0	300.0	300.0	300.0	300.0	300.0	300.0	300.0
		3.336	4.021	5.590	6.672	8.341	10.01	11.12	12.55	15.01	18.04	20.02	22.56	27.26	29.42	29.42	29.42	29.42	29.42	29.42	29.42	29.42	29.42	29.42	29.42
6RK120GU-□	6GU□K	21.0	25.3	35.1	42.1	52.6	63.2	63.2	79.1	94.9	114.0	114.0	143.0	171.0	206.0	228.0	286.0	343.0	400.0	400.0	400.0	400.0	400.0	400.0	400.0
		2.06	2.48	3.44	4.13	5.16	6.19	6.19	7.75	9.30	11.20	11.20	14.00	16.80	20.00	22.40	28.00	33.60	39.20	39.20	39.20	39.20	39.20	39.20	39.20
6RK140GU-□	6GU□K	24.1	28.8	40.1	48.1	60.1	72.1	72.1	90.3	108.0	130.0	130.0	163.0	196.0	235.0	261.0	327.0	392.0	400.0	400.0	400.0	400.0	400.0	400.0	400.0
		2.36	2.83	3.93	4.71	5.89	7.07	7.07	8.85	10.60	12.70	12.70	16.00	19.20	23.00	25.60	32.00	38.40	39.20	39.20	39.20	39.20	39.20	39.20	39.20
6RK180GU-□	6GU□K	24.1	28.8	40.1	48.1	60.1	72.1	72.1	90.3	108.0	130.0	130.0	163.0	196.0	235.0	261.0	327.0	392.0	400.0	400.0	400.0	400.0	400.0	400.0	400.00
		2.36	2.83	3.93	4.71	5.89	7.07	7.07	8.85	10.60	12.70	12.70	16.00	19.20	23.00	25.60	32.00	38.40	39.20	39.20	39.20	39.20	39.20	39.20	39.20
6RK200GU-□	6GU□K	24.1	28.8	40.1	48.1	60.1	72.1	72.1	90.3	108.0	130.0	130.0	163.0	196.0	235.0	261.0	327.0	392.0	400.0	400.0	400.0	400.0	400.0	400.0	400.0
		2.36	2.83	3.93	4.71	5.89	7.07	7.07	8.85	10.60	12.70	12.70	16.00	19.20	23.00	25.60	32.00	38.40	39.20	39.20	39.20	39.20	39.20	39.20	39.20

60Hz电机 单位: kgf.cm/N.m

转速Output Shaft Speed		600	500	360	300	240	200	180	144	120	100	90	72	60	50	45	36	30	24	20	18	15	12	10	9
减速比Reduction Ratio		3	3.6	5	6	7.5	9	10	12.5	15	18	20	25	30	36	40	50	60	75	90	100	120	150	180	200
3RK15GN-□	3GN□K	2.9	3.5	4.9	5.8	7.3	8.7	9.7	12.2	14.6	17.5	17.5	21.9	26.3	31.5	35	39.6	47.5	59.4	71.3	79.2	80	80	80	80
		0.284	0.343	0.481	0.568	0.715	0.853	0.951	1.196	1.432	1.715	1.715	2.416	2.577	3.087	3.43	3.883	4.658	5.825	6.992	7.767	7.84	7.84	7.84	7.84
4RK25GN-□	4GN□K	4.4	5.2	7.3	8.7	10.9	13.1	14.6	18.2	21.9	26.2	26.3	32.9	39.4	47.3	52.6	59.4	71.3	80.0	80.0	80.0	80.0	80.0	80.0	80.0
		0.431	0.510	0.715	0.853	1.068	1.284	1.431	1.784	2.146	2.568	2.577	3.224	3.861	4.635	5.155	5.821	6.987	7.84	7.84	7.84	7.84	7.84	7.84	7.84
5RK40GN-□	5GN□K	6.8	8.2	11.3	13.6	17.0	20.4	22.7	28.4	34.0	40.8	40.9	51.1	61.3	73.6	81.8	100.0	100.0	100.0	100.0	100.0	100.0	100.0	100.0	100.0
		0.666	0.804	1.107	1.333	1.666	1.999	2.225	2.783	3.332	3.998	4.008	5.008	6.007	7.213	8.016	9.800	9.800	9.800	9.800	9.800	9.800	9.800	9.800	9.800
5RK60GN-□	5GN□K	9.7	11.7	16.2	19.4	24.3	29.2	32.4	36.5	43.8	52.6	58.4	66.0	79.2	95.0	106.0	132.0	158.0	177.0	200.0	200.0	200.0	200.0	200.0	200.0
		0.953	1.147	1.588	1.901	2.381	2.862	3.175	3.577	4.292	5.155	5.726	6.648	7.762	9.31	10.39	12.94	15.48	17.35	19.60	19.60	19.60	19.60	19.60	19.60
5RK90GU-□	5GU□K	14.6	17.5	24.3	29.2	36.5	43.7	48.6	54.8	65.7	78.8	87.6	99.0	119.0	143.0	158.0	198.0	200.0	200.0	200.0	200.0	200.0	200.0	200.0	200.0
		1.431	1.715	2.381	2.862	3.577	4.675	4.763	5.370	6.439	7.722	8.585	9.702	11.66	14.01	15.48	19.40	19.60	19.60	19.60	19.60	19.60	19.60	19.60	19.60
5RK120GU-□	5GU□K	18.7	22.5	31.2	37.4	46.8	56.1	62.4	70.2	84.2	101.0	112.0	126.0	152.0	182.0	200.0	200.0	200.0	200.0	200.0	200.0	200.0	200.0	200.0	200.0
		1.835	2.202	3.058	3.670	4.587	5.505	6.116	6.881	8.257	9.909	11.01	12.39	14.86	17.84	19.61	19.61	19.61	19.61	19.61	19.61	19.61	19.61	19.61	19.61
5RK180GU-□	5GU□K	28.1	34.0	47.0	57.0	71.0	84.2	94.0	105.0	126.0	152.0	168.0	189.0	227.0	273.0	300.0	300.0	300.0	300.0	300.0	300.0	300.0	300.0	300.0	300.0
		2.756	3.334	4.609	5.590	6.963	8.257	9.218	10.30	12.39	14.91	16.51	18.58	22.29	26.75	29.42	29.42	29.42	29.42	29.42	29.42	29.42	29.42	29.42	29.42
6RK120GU-□	6GU□K	17.8	21.3	29.6	35.5	44.4	53.3	53.3	69.7	80.0	96.1	96.1	121.0	146.0	174.0	193.0	241.0	289.0	362.0	400.0	400.0	400.0	400.0	400.0	400.0
		1.74	2.09	2.90	3.48	4.35	5.22	5.22	6.54	7.85	9.42	9.42	11.80	14.20	17.00	18.90	23.60	28.40	35.50	39.20	39.20	39.20	39.20	39.20	39.20
6RK140GU-□	6GU□K	20.7	24.9	34.6	41.2	51.8	62.1	62.1	77.6	93.4	112.0	112.0	141.0	169.0	203.0	226.0	282.0	338.0	400.0	400.0	400.0	400.0	400.0	400.0	400.0
		2.03	2.44	3.39	4.06	5.08	6.09	6.09	7.60	9.15	11.00	11.00	13.80	16.60	19.90	22.10	27.60	33.10	39.20	39.20	39.20	39.20	39.20	39.20	39.20
6RK180GU-□	6GU□K	20.7	24.9	34.6	41.2	51.8	62.1	62.1	77.6	93.4	112.0	112.0	141.0	169.0	203.0	226.0	282.0	338.0	400.0	400.0	400.0	400.0	400.0	400.0	400.0
		2.03	2.44	3.39	4.06	5.08	6.09	6.09	7.60	9.15	11.00	11.00	13.80	16.60	19.90	22.10	27.60	33.10	39.20	39.20	39.20	39.20	39.20	39.20	39.20
6RK200GU-□	6GU□K	20.7	24.9	34.6	41.2	51.8	62.1	62.1	77.6	93.4	112.0	112.0	141.0	203.0	226.0	282.0	338.0	400.0	400.0	400.0	400.0	400.0	400.0	400.0	400.0
		2.03	2.44	3.39	4.06	5.08	6.09	6.09	7.60	9.15	11.00	11.00	13.80	16.60	19.90	22.10	27.60	33.10	39.20	39.20	39.20	39.20	39.20	39.20	39.20

外形尺寸 Overall Dimension

15W

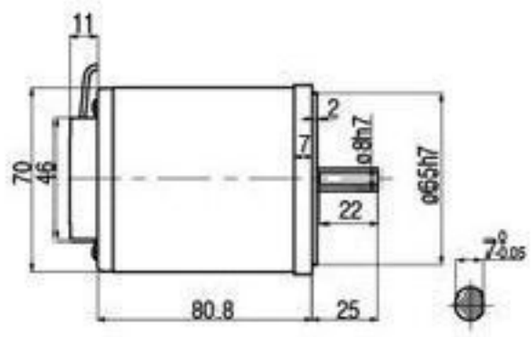

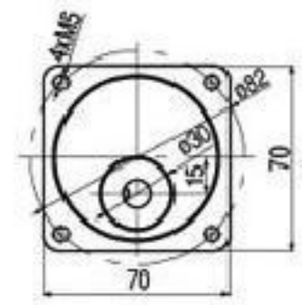

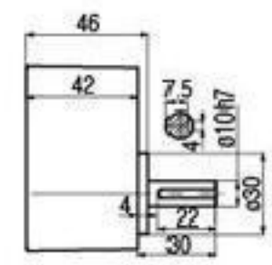

25W

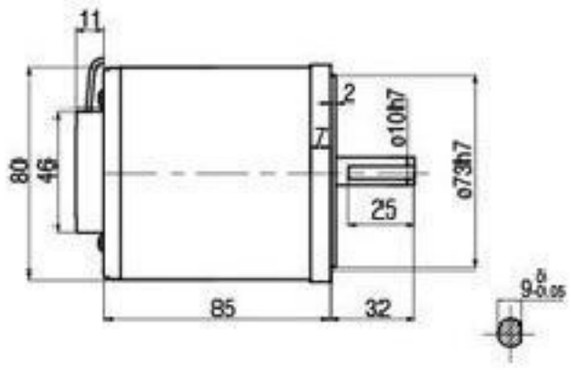

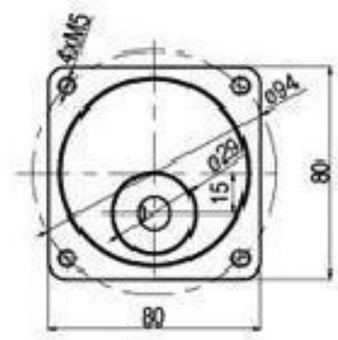

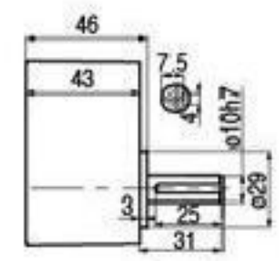

40W

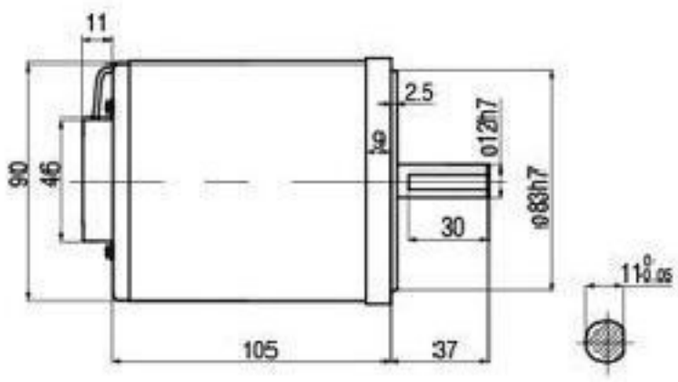

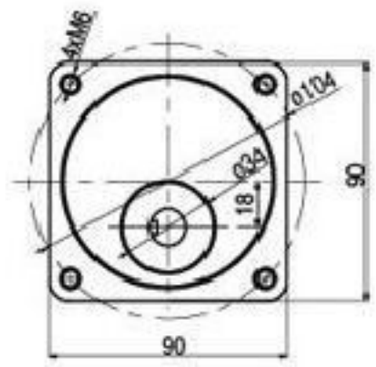

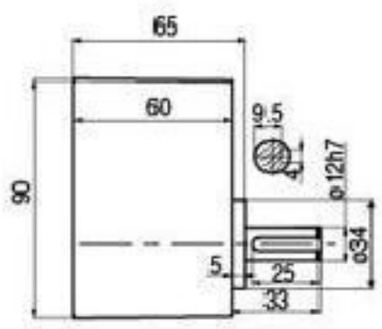

60W

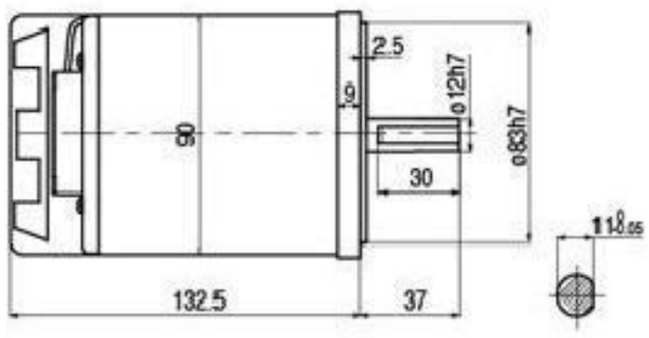

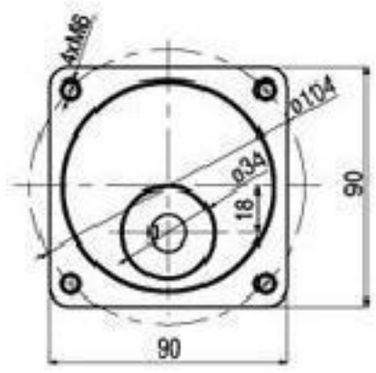

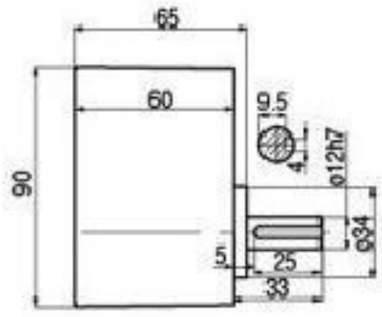

90W-120W

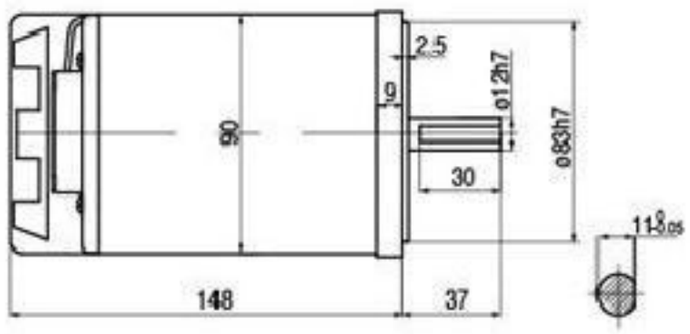

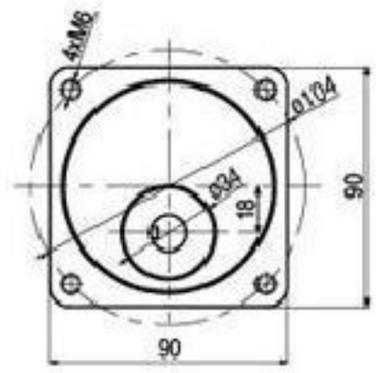

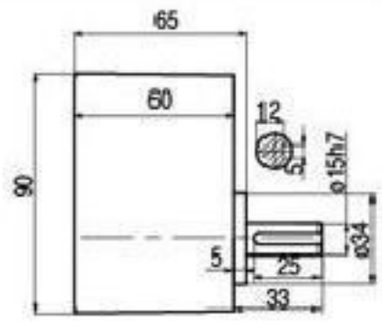

120W-200W

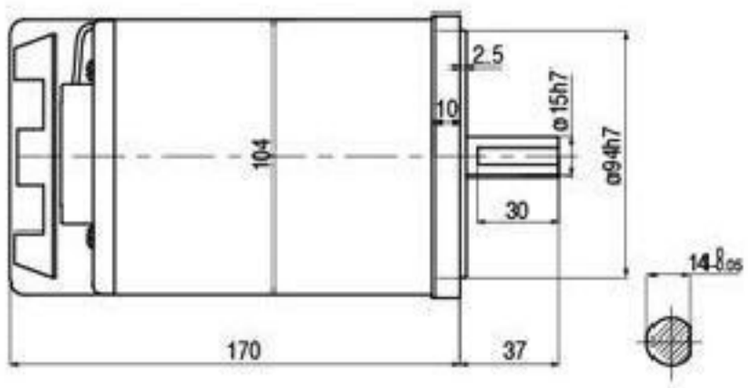

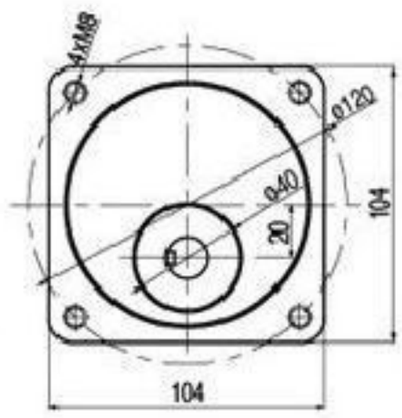

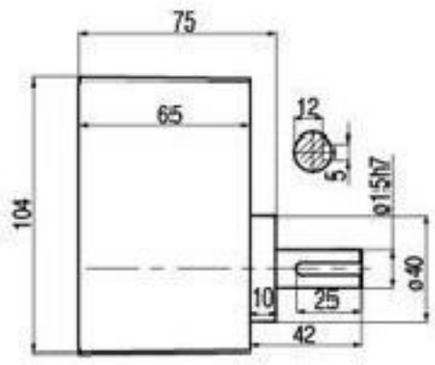

五星减速机
WUXING JIANSUJI

电机特性表 List of Motor Characteristics

型号/类型 Model / Type		额定功率 Rated Power	电压 Voltage	频率 Frequency	极数 Poles	额定转速 Rated Speed	启动转矩 Rated Torque	额定转矩 Rated Current	额定电流 Starting Torque	电容 Capacitor
光轴 Round shaft	齿轴 Pinion shaft	W	V	Hz	P	RPM	MN·M	MN·M	A	μf/450V
3IK15RA-A	3IK15RGN-A	15	1ph110	50/60	4	90-1350	0.06	0.04	0.12	6.0
3IK15RA-C	3IK15RGN-C	15	1ph220	50/60	4	90-1350	0.06	0.04	0.12	1.5
4IK25RA-A	4IK25RGN-C	25	1ph110	50/60	4	90-1350	0.13	0.05	0.19	6.0
4IK25RA-C	4IK25RGN-C	25	1ph220	50/60	4	90-1350	0.13	0.05	0.19	2.0
5IK40RA1-A	5IK40RGN-A	40	1ph110	50/60	4	90-1350	0.19	0.06	0.30	10.0
5IK40RA1-C	5IK40RGN-C	40	1ph220	50/60	4	90-1350	0.19	0.06	0.30	2.5
5IK60RA1-AF	5IK60RGN-AF	60	1ph110	50/60	4	90-1350	0.31	0.14	0.50	12.0
5IK60RA1-CF	5IK60RGN-CF	60	1ph220	50/60	4	90-1350	0.33	0.14	0.50	3.5
5IK90RA1-AF	5IK90RGU-AF	90	1ph110	50/60	4	90-1350	0.48	0.23	0.71	18.0
5IK90RA1-CF	5IK90RGU-CF	90	1ph220	50/60	4	90-1350	0.45	0.23	0.71	5.0
5IK120RA1-AF	5IK120RGU-AF	120	1ph110	50/60	4	90-1350	0.55	0.40	0.75	18.0
5IK120RA1-CF	5IK120RGU-CF	120	1ph220	50/60	4	90-1350	0.55	0.40	0.75	6.5
5IK180RA1-AF	5IK180RGU-AF	180	1ph110	50/60	4	90-1350	0.97	1.27	2.40	30.0
5IK180RA1-CF	5IK180RGU-CF	180	1ph220	50/60	4	90-1350	1.12	1.23	1.21	12.0
6IK120RA1-AF	6IK120RGU-AF	120	1ph110	50/60	4	90-1350	0.51	0.40	0.75	30.0
6IK120RA1-CF	6IK120RGU-CF	120	1ph220	50/60	4	90-1350	0.65	0.40	0.75	8.0
6IK140RA1-AF	6IK140RGU-AF	140	1ph110	50/60	4	90-1350	0.62	0.45	0.85	30.0
6IK140RA1-CF	6IK140RGU-CF	140	1ph220	50/60	4	90-1350	0.68	0.45	0.85	8.0
6IK180RA1-AF	6IK180RGU-AF	180	1ph110	50/60	4	90-1350	0.80	0.63	1.20	30.0
6IK180RA1-CF	6IK180RGU-CF	180	1ph220	50/60	4	90-1350	0.92	0.63	1.20	10.0
6IK200RA1-AF	6IK200RGU-AF	200	1ph110	50/60	4	90-1350	0.84	0.67	1.32	30.0
6IK200RA1-CF	6IK200RGU-CF	200	1ph220	50/60	4	90-1350	0.84	0.67	1.32	8.0

●使用电压不同，电容容量也不相同。故应与使用电压相对应，正确使用。●不能正确使用是造成故障的主要原因。订货时，在确认使用电压后，选择正确的型号进行订货。
●The capacitor capacitance will be different under different voltage. A correct capacitor capacitance is required to match the applied voltage. ●Wrong capacitor capacitance is the cause of trouble. You must confirm a correct voltage and select a correct model when your purchase order is placed.

五星减速机
WUXING JIANSUJI

装有减速机时的容许转矩 allowable torque with gearbox

50Hz电机 单位: kgf.cm/N.m

转速Output Shaft Speed		500	417	300	250	200	166	150	120	100	83	75	60	50	41	37	30	25	20	16	15	12	10	8	7.5
减速比Reduction Ratio		3	3.6	5	6	7.5	9	10	12.5	15	18	20	25	30	36	40	50	60	75	90	100	120	150	180	200
3IK15RGN-□	3GN□K	3.2	3.9	5.4	6.5	8.1	9.7	10.8	13.5	16.2	19.4	19.4	24.2	29.1	34.9	38.8	43.6	50.0	50.0	50.0	50.0	50.0	50.0	50.0	50.0
		0.314	0.382	0.530	0.637	0.794	0.951	1.059	1.324	1.587	1.902	1.902	2.373	2.854	3.423	3.805	4.276	4.90	4.90	4.90	4.90	4.90	4.90	4.90	4.90
4IK25RGN-□	4GN□K	5.3	6.4	8.9	10.7	13.4	16.0	17.8	22.3	26.7	32.1	32.1	40.2	48.2	57.8	64.2	72.6	80.0	80.0	80.0	80.0	80.0	80.0	80.0	80.0
		0.519	0.627	0.872	1.049	1.313	1.568	1.744	2.185	2.617	3.146	3.146	3.940	4.724	5.664	6.292	7.115	7.84	7.84	7.84	7.84	7.84	7.84	7.84	7.84
5IK40RGN-□	5GN□K	8.3	9.9	13.8	16.5	20.7	24.8	27.5	34.4	41.3	49.6	62.1	74.5	89.4	99.3	100.0	100.0	100.0	100.0	100.0	100.0	100.0	100.0	100.0	100.0
		0.813	0.970	1.352	1.617	2.029	2.430	2.695	3.371	4.047	4.861	4.861	6.086	7.301	8.761	9.731	9.80	9.80	9.80	9.80	9.80	9.80	9.80	9.80	9.80
5IK60RGN-□	5GN□K	12.2	14.6	20.3	24.3	30.4	36.5	40.5	45.6	54.8	65.7	73.0	82.5	99.0	119.0	132.0	165.0	198.0	200.0	200.0	200.0	200.0	200.0	200.0	200.0
		1.196	1.431	1.989	2.381	2.989	3.577	3.969	4.469	5.370	6.439	7.154	8.085	9.702	11.66	12.94	16.17	19.40	19.60	19.60	19.60	19.60	19.60	19.60	19.60
5IK90RGU-□	5GU□K	18.2	21.9	30.4	36.5	45.6	54.7	60.8	68.4	82.1	98.6	110.0	124.0	149.0	178.0	198.0	200.0	200.0	200.0	200.0	200.0	200.0	200.0	200.0	200.0
		1.784	2.145	2.979	3.577	4.469	5.361	5.958	6.703	8.046	9.663	10.78	12.15	14.60	17.44	19.40	19.60	19.60	19.60	19.60	19.60	19.60	19.60	19.60	19.60
5IK120RGU-□	5GU□K	23.2	27.8	38.7	46.4	58.0	69.6	77.4	87.0	104.0	125.0	139.0	156.0	188.0	200.0	200.0	200.0	200.0	200.0	200.0	200.0	200.0	200.0	200.0	200.0
		2.276	2.731	3.793	4.552	5.689	6.827	7.586	8.534	10.24	12.29	13.65	15.36	18.43	19.61	19.61	19.61	19.61	19.61	19.61	19.61	19.61	19.61	19.61	19.61
5IK180RGU-□	5GU□K	34.0	41.0	57.0	68.0	85.1	102.0	113.0	128.0	153.0	184.0	204.0	230.0	278.0	300.0	300.0	300.0	300.0	300.0	300.0	300.0	300.0	300.0	300.0	300.0
		3.336	4.021	5.590	6.672	8.341	10.01	11.12	12.55	15.01	18.04	20.02	22.56	27.26	29.42	29.42	29.42	29.42	29.42	29.42	29.42	29.42	29.42	29.42	29.42
6IK120RGU-	6GU□K	21.0	25.3	35.1	42.1	52.6	63.2	63.2	79.1	94.9	114.0	114.0	143.0	171.0	206.0	228.0	286.0	343.0	400.0	400.0	400.0	400.0	400.0	400.0	400.0
		2.06	2.48	3.44	4.13	5.16	6.19	6.19	7.75	9.30	11.20	11.20	14.00	16.80	20.00	22.40	28.00	33.60	39.20	39.20	39.20	39.20	39.20	39.20	39.20
6IK140RGU-□	6GU□K	24.1	28.8	40.1	48.1	60.1	72.1	72.1	90.3	108.0	130.0	130.0	163.0	196.0	235.0	261.0	327.0	392.0	400.0	400.0	400.0	400.0	400.0	400.0	400.0
		2.36	2.83	3.93	4.71	5.89	7.07	7.07	8.85	10.60	12.70	12.70	16.00	19.20	23.00	25.60	32.00	38.40	39.20	39.20	39.20	39.20	39.20	39.20	39.20
6IK180RGU-□	6GU□K	24.1	28.8	40.1	48.1	60.1	72.1	72.1	90.3	108.0	130.0	130.0	163.0	196.0	235.0	261.0	327.0	392.0	400.0	400.0	400.0	400.0	400.0	400.0	400.00
		2.36	2.83	3.93	4.71	5.89	7.07	7.07	8.85	10.60	12.70	12.70	16.00	19.20	23.00	25.60	32.00	38.40	39.20	39.20	39.20	39.20	39.20	39.20	39.20
6IK200RGU-□	6GU□K	24.1	28.8	40.1	48.1	60.1	72.1	72.1	90.3	108.0	130.0	130.0	163.0	196.0	235.0	261.0	327.0	392.0	400.0	400.0	400.0	400.0	400.0	400.0	400.0
		2.36	2.83	3.93	4.71	5.89	7.07	7.07	8.85	10.60	12.70	12.70	16.00	19.20	23.00	25.60	32.00	38.40	39.20	39.20	39.20	39.20	39.20	39.20	39.20

60Hz电机 单位: kgf.cm/N.m

转速Output Shaft Speed		600	500	360	300	240	200	180	144	120	100	90	72	60	50	45	36	30	24	20	18	15	12	10	9
减速比Reduction Ratio		3	3.6	5	6	7.5	9	10	12.5	15	18	20	25	30	36	40	50	60	75	90	100	120	150	180	200
3IK15RGN-□	3GN□K	3.0	3.6	5.1	6.1	7.6	9.1	10.1	12.7	15.2	18.2	18.2	22.8	27.3	32.8	36.5	41.0	49.2	50.0	50.0	50.0	50.0	50.0	50.0	50.0
		0.294	0.353	0.500	0.598	0.745	0.892	0.990	1.245	1.491	1.785	1.785	2.236	2.677	3.217	3.579	4.021	4.825	4.90	4.90	4.90	4.90	4.90	4.90	4.90
4IK25RGN-□	4GN□K	4.4	5.2	7.3	8.7	10.9	13.1	14.6	18.2	21.9	26.2	26.3	32.9	39.4	47.3	52.6	59.4	71.3	80.0	80.0	80.0	80.0	80.0	80.0	80.0
		0.431	0.510	0.715	0.853	1.068	1.284	1.431	1.784	2.146	2.568	2.577	3.224	3.861	4.635	5.155	5.821	6.987	7.84	7.84	7.84	7.84	7.84	7.84	7.84
5IK40RGN-□	5GN□K	6.8	8.2	11.3	13.6	17.0	20.4	22.7	28.4	34.0	40.8	40.9	51.1	61.3	73.6	81.8	100.0	100.0	100.0	100.0	100.0	100.0	100.0	100.0	100.0
		0.666	0.804	1.107	1.333	1.666	1.999	2.225	2.783	3.332	3.998	4.008	5.008	6.007	7.213	8.016	9.800	9.800	9.800	9.800	9.800	9.800	9.800	9.800	9.800
5IK60RGN-□	5GN□K	9.7	11.7	16.2	19.4	24.3	29.2	32.4	36.5	43.8	52.6	58.4	66.0	79.2	95.0	106.0	132.0	158.0	177.0	200.0	200.0	200.0	200.0	200.0	200.0
		0.953	1.147	1.588	1.901	2.381	2.862	3.175	3.577	4.292	5.155	5.726	6.648	7.762	9.31	10.39	12.94	15.48	17.35	19.60	19.60	19.60	19.60	19.60	19.60
5IK90RGU-□	5GU□K	14.6	17.5	24.3	29.2	36.5	43.7	48.6	54.8	65.7	78.8	87.6	99.0	119.0	143.0	158.0	198.0	200.0	200.0	200.0	200.0	200.0	200.0	200.0	200.0
		1.431	1.715	2.381	2.862	3.577	4.675	4.763	5.370	6.439	7.722	8.585	9.702	11.66	14.01	15.48	19.40	19.60	19.60	19.60	19.60	19.60	19.60	19.60	19.60
5IK120RGU-□	5GU□K	18.7	22.5	31.2	37.4	46.8	56.1	62.4	70.2	84.2	101.0	112.0	126.0	152.0	182.0	200.0	200.0	200.0	200.0	200.0	200.0	200.0	200.0	200.0	200.0
		1.835	2.202	3.058	3.670	4.587	5.505	6.116	6.881	8.257	9.909	11.01	12.39	14.86	17.84	19.61	19.61	19.61	19.61	19.61	19.61	19.61	19.61	19.61	19.61
5IK180RGU-□	5GU□K	28.1	34.0	47.0	57.0	71.0	84.2	94.0	105.0	126.0	152.0	168.0	189.0	227.0	273.0	300.0	300.0	300.0	300.0	300.0	300.0	300.0	300.0	300.0	300.0
		2.756	3.334	4.609	5.590	6.963	8.257	9.218	10.30	12.39	14.91	16.51	18.58	22.29	26.75	29.42	29.42	29.42	29.42	29.42	29.42	29.42	29.42	29.42	29.42
6IK120RGU-	6GU□K	17.8	21.3	29.6	35.5	44.4	53.3	53.3	69.7	80.0	96.1	96.1	121.0	146.0	174.0	193.0	241.0	289.0	362.0	400.0	400.0	400.0	400.0	400.0	400.0
		1.74	2.09	2.90	3.48	4.35	5.22	5.22	6.54	7.85	9.42	9.42	11.80	14.20	17.00	18.90	23.60	28.40	35.50	39.20	39.20	39.20	39.20	39.20	39.20
6IK140RGU-□	6GU□K	20.7	24.9	34.6	41.2	51.8	62.1	62.1	77.6	93.4	112.0	112.0	141.0	169.0	203.0	226.0	282.0	338.0	400.0	400.0	400.0	400.0	400.0	400.0	400.0
		2.03	2.44	3.39	4.06	5.08	6.09	6.09	7.60	9.15	11.00	11.00	13.80	16.60	19.90	22.10	27.60	33.10	39.20	39.20	39.20	39.20	39.20	39.20	39.20
6IK180RGU-□	6GU□K	20.7	24.9	34.6	41.2	51.8	62.1	62.1	77.6	93.4	112.0	112.0	141.0	169.0	203.0	226.0	282.0	338.0	400.0	400.0	400.0	400.0	400.0	400.0	400.0
		2.03	2.44	3.39	4.06	5.08	6.09	6.09	7.60	9.15	11.00	11.00	13.80	16.60	19.90	22.10	27.60	33.10	39.20	39.20	39.20	39.20	39.20	39.20	39.20
6IK200RGU-□	6GU□K	20.7	24.9	34.6	41.2	51.8	62.1	62.1	77.6	93.4	112.0	112.0	141.0	203.0	226.0	282.0	338.0	400.0	400.0	400.0	400.0	400.0	400.0	400.0	400.0
		2.03	2.44	3.39	4.06	5.08	6.09	6.09	7.60	9.15	11.00	11.00	13.80	16.60	19.90	22.10	27.60	33.10	39.20	39.20	39.20	39.20	39.20	39.20	39.20

外形尺寸 Overall Dimension

15W

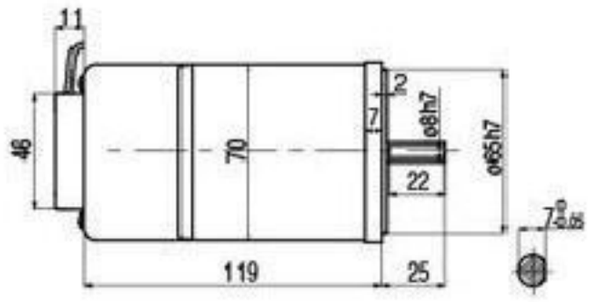

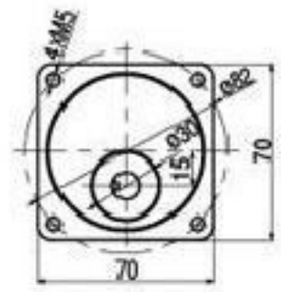

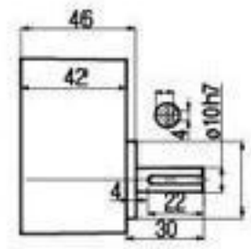

25W

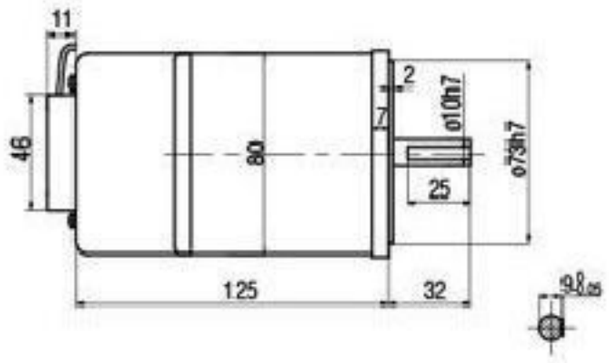

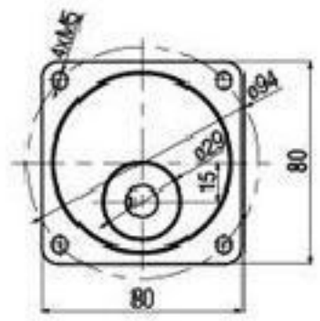

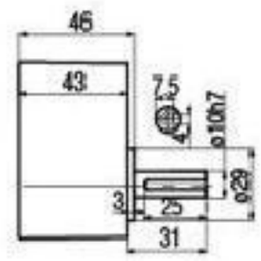

40W

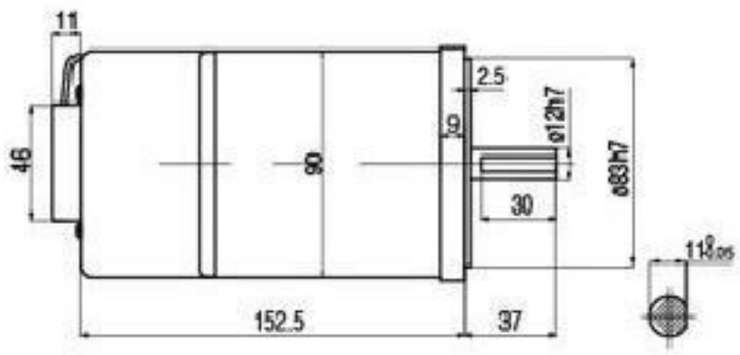

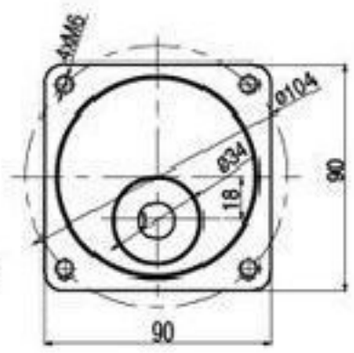

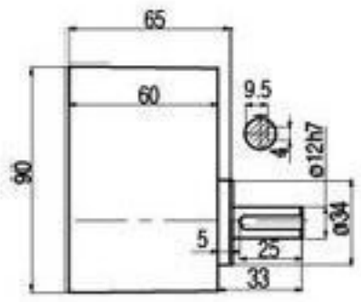

60W

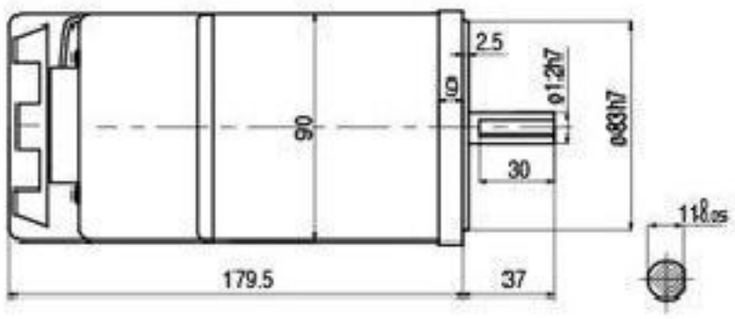

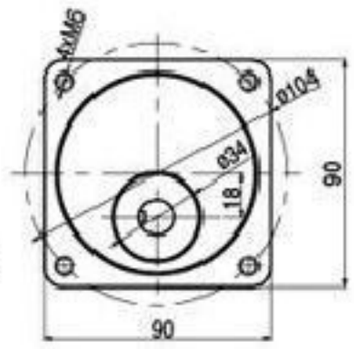

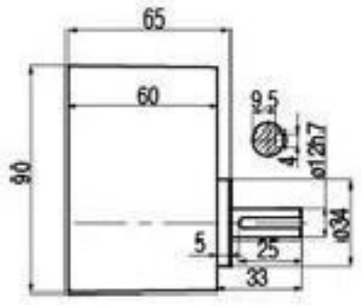

90W-120W

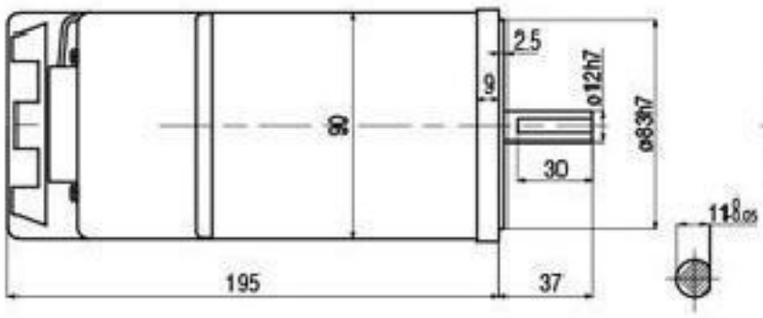

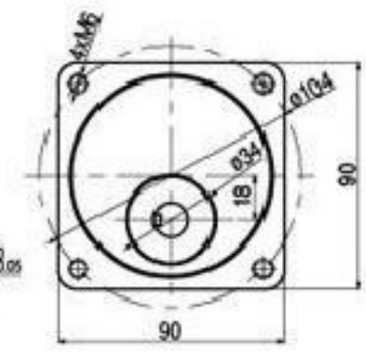

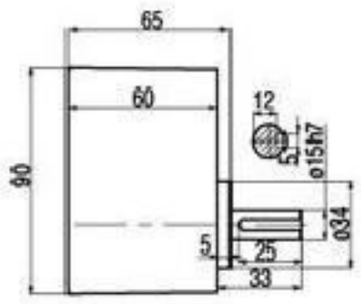

120W-200W

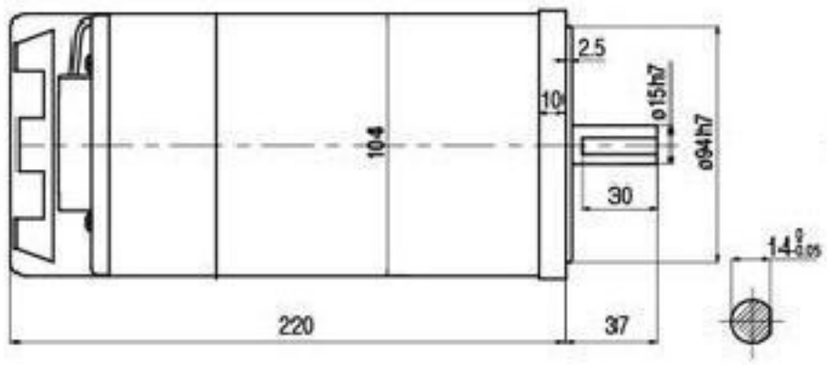

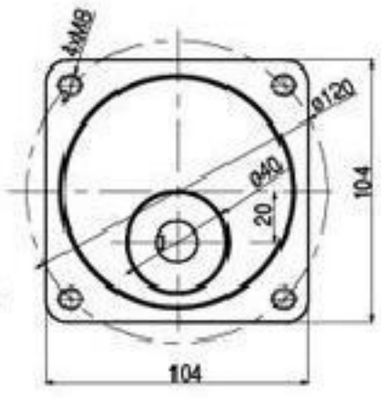

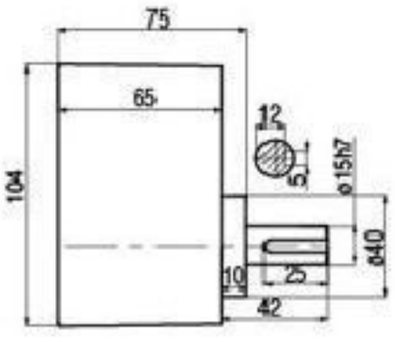

五星减速机
WUXING JIANSUJI

电机特性表 List of Motor Characteristics

型号/类型 Model / Type		额定功率 Rated Power	电压 Voltage	频率 Frequency	极数 Poles	额定转速 Rated Speed	启动转矩 Rated Torque	额定转矩 Rated Current	额定电流 Starting Torque	电容 Capacitor
光轴 Round shaft	齿轴 Pinion shaft	W	V	Hz	P	RPM	MN·M	MN·M	A	μf/450V
3RK15RA-AM	3RK15RGN-AM	15	1ph110	50/60	4	1300	0.12	0.11	0.32	6.0
3RK15RA-CM	3RK15RGN-CM	15	1ph220	50/60	4	1300	0.12	0.11	0.17	1.5
3RK15RA-SM	3RK15RGN-SM	15	3ph220	50/60	4	1300	0.14	0.19	0.13	/
3RK15RA-S_3	3RK15RGN-S_3	15	3ph380	50/60	4	1300	0.14	0.18	0.11	/
4RK25RA-AM	4RK25RGN-AM	25	1ph110	50/60	4	1350	0.17	0.18	0.43	6.0
4RK25RA-CM	4RK25RGN-CM	25	1ph220	50/60	4	1350	0.14	0.18	0.24	2.0
4RK25RA-SM	4RK25RGN-SM	25	3ph220	50/60	4	1300	0.52	0.19	0.25	/
4RK25RA-S_3M	4RK25RGN-S_3M	25	3ph380	50/60	4	1300	0.52	0.19	0.14	/
5RK40RA1-AM	5RK40RGN-AM	40	1ph110	50/60	4	1350	0.30	0.29	0.68	12.0
5RK40RA1-CM	5RK40RGN-CM	40	1ph220	50/60	4	1350	0.30	0.29	0.35	2.5
5RK40RA1-SM	5RK40RGN-SM	40	3ph220	50/60	4	1300	1.15	0.29	0.38	/
5RK40RA1-S_3M	5RK40RGN-S_3M	40	3ph380	50/60	4	1300	1.15	0.29	0.22	/
5RK60RA1-AFM	5RK60RGN-AFM	60	1ph110	50/60	4	1350	0.45	0.44	1.10	12.0
5RK60RA1-CFM	5RK60RGN-CFM	60	1ph220	50/60	4	1350	0.45	0.44	0.45	3.5
5RK60RA1-SFM	5RK60RGN-SFM	60	3ph220	50/60	4	1350	1.70	0.46	0.49	/
5RK60RA1-S_3FM	5RK60RGN-S_3FM	60	3ph380	50/60	4	1350	1.70	0.46	0.28	/
5RK90RA1-AFM	5RK90RGU-AFM	90	1ph110	50/60	4	1350	0.48	0.64	1.55	18.0
5RK90RA1-CFM	5RK90RGU-CFM	90	1ph220	50/60	4	1350	0.48	0.64	0.59	5.0
5RK90RA1-SFM	5RK90RGU-SFM	90	3ph220	50/60	4	1350	2.30	0.66	0.66	/
5RK90RA1-S_3FM	5RK90RGU-S_3FM	90	3ph380	50/60	4	1350	2.30	0.66	0.28	/
5RK120RA1-AFM	5RK120RGU-AFM	120	1ph110	50/60	4	1300	0.78	0.90	2.10	18.0
5RK120RA1-CFM	5RK120RGU-CFM	120	1ph220	50/60	4	1300	0.75	0.87	0.92	6.5
5RK120RA1-SFM	5RK120RGU-SFM	120	3ph220	50/60	4	1300	3.00	0.87	0.86	/
5RK120RA1-S_3FM	5RK120RGU-S_3FM	120	3ph380	50/60	4	1300	3.00	0.87	0.51	/
5RK180RA1-AFM	5RK180RGU-AFM	180	1ph110	50/60	4	1350	0.97	1.27	2.40	30.0
5RK180RA1-CFM	5RK180RGU-CFM	180	1ph220	50/60	4	1350	1.12	1.23	1.21	12.0
5RK180RA1-SFM	5RK180RGU-SFM	180	3ph220	50/60	4	1350	4.50	1.23	0.83	/
5RK180RA1-S_3FM	5RK180RGU-S_3FM	180	3ph380	50/60	4	1350	4.50	1.23	0.59	/
6RK120RA1-AFM	6RK120RGU-AFM	120	1ph110	50/60	4	1350	0.59	0.85	1.90	30.0
6RK120RA1-CFM	6RK120RGU-CFM	120	1ph220	50/60	4	1350	0.75	0.85	0.88	8.0
6RK120RA1-SFM	6RK120RGU-SFM	120	3ph220	50/60	4	1350	3.50	0.85	0.89	/
6RK120RA1-S_3FM	6RK120RGU-S_3FM	120	3ph380	50/60	4	1350	3.50	0.85	0.51	/
6RK140RA1-AFM	6RK140RGU-AFM	140	1ph110	50/60	4	1350	0.90	0.99	2.00	30.0
6RK140RA1-CFM	6RK140RGU-CFM	140	1ph220	50/60	4	1350	0.90	0.099	1.13	8.0
6RK140RA1-SFM	6RK140RGU-SFM	140	3ph220	50/60	4	1350	3.50	0.99	0.95	/
6RK140RA1-S_3FM	6RK140RGU-S_3FM	140	3ph380	50/60	4	1350	3.50	0.99	0.55	/
6RK180RA1-AFM	6RK180RGU-AFM	180	1ph110	50/60	4	1350	0.63	1.25	1.90	30.0
6RK180RA1-CFM	6RK180RGU-CFM	180	1ph220	50/60	4	1350	0.81	1.25	1.17	10.0
6RK180RA1-SFM	6RK180RGU-SFM	180	3ph220	50/60	4	1350	4.60	1.25	0.89	/
6RK180RA1-S_3FM	6RK180RGU-S_3FM	180	3ph380	50/60	4	1350	4.60	1.25	0.51	/
6RK200RA1-AFM	6RK200RGU-AFM	200	1ph110	50/60	4	1350	1.32	1.32	2.80	30.0
6RK200RA1-CFM	6RK200RGU-CFM	200	1ph220	50/60	4	1350	1.32	1.32	1.25	10.0
6RK200RA1-SFM	6RK200RGU-SFM	200	3ph220	50/60	4	1350	4.70	1.32	0.95	/
6RK200RA1-S_3FM	6RK200RGU-S_3FM	200	3ph380	50/60	4	1350	4.70	1.32	0.55	/

五星减速机
WUXING JIANSUJI

装有减速机时的容许转矩 allowable torque with gearbox

50Hz电机 单位: kgf.cm/N.m

转速Output Shaft Speed		500	417	300	250	200	166	150	120	100	83	75	60	50	41	37	30	25	20	16	15	12	10	8	7.5
减速比Reduction Ratio		3	3.6	5	6	7.5	9	10	12.5	15	18	20	25	30	36	40	50	60	75	90	100	120	150	180	200
3RK15RGN-□	3GN□K	3.4	4.1	5.7	6.8	8.5	10.2	11.3	14.2	17	20.4	20.4	25.6	30.7	36.8	40.9	46.2	55.4	69.2	80	80	80	80	80	80
		0.333	0.402	0.559	0.666	0.833	1	1.107	1.392	1.666	1.999	1.999	2.509	3.009	3.606	4.008	4.53	5.423	6.786	7.84	7.84	7.84	7.84	7.84	7.84
4RK25RGN-□	4GN□K	5.3	6.4	8.9	10.7	13.4	16.0	17.8	22.3	26.7	32.1	32.1	40.2	48.2	57.8	64.2	72.6	80.0	80.0	80.0	80.0	80.0	80.0	80.0	80.0
		0.519	0.627	0.872	1.049	1.313	1.568	1.744	2.185	2.617	3.146	3.146	3.940	4.724	5.664	6.292	7.115	7.84	7.84	7.84	7.84	7.84	7.84	7.84	7.84
5RK40RGN-□	5GN□K	8.3	9.9	13.8	16.5	20.7	24.8	27.5	34.4	41.3	49.6	62.1	74.5	89.4	99.3	100.0	100.0	100.0	100.0	100.0	100.0	100.0	100.0	100.0	100.0
		0.813	0.970	1.352	1.617	2.029	2.430	2.695	3.371	4.047	4.861	4.861	6.086	7.301	8.761	9.731	9.80	9.80	9.80	9.80	9.80	9.80	9.80	9.80	9.80
5RK60RGN-□	5GN□K	12.2	14.6	20.3	24.3	30.4	36.5	40.5	45.6	54.8	65.7	73.0	82.5	99.0	119.0	132.0	165.0	198.0	200.0	200.0	200.0	200.0	200.0	200.0	200.0
		1.196	1.431	1.989	2.381	2.989	3.577	3.969	4.469	5.370	6.439	7.154	8.085	9.702	11.66	12.94	16.17	19.40	19.60	19.60	19.60	19.60	19.60	19.60	19.60
5RK90RGU-□	5GU□K	18.2	21.9	30.4	36.5	45.6	54.7	60.8	68.4	82.1	98.6	110.0	124.0	149.0	178.0	198.0	200.0	200.0	200.0	200.0	200.0	200.0	200.0	200.0	200.0
		1.784	2.145	2.979	3.577	4.469	5.361	5.958	6.703	8.046	9.663	10.78	12.15	14.60	17.44	19.40	19.60	19.60	19.60	19.60	19.60	19.60	19.60	19.60	19.60
5RK120RGU-□	5GU□K	23.2	27.8	38.7	46.4	58.0	69.6	77.4	87.0	104.0	125.0	139.0	156.0	188.0	200.0	200.0	200.0	200.0	200.0	200.0	200.0	200.0	200.0	200.0	200.0
		2.276	2.731	3.793	4.552	5.689	6.827	7.586	8.534	10.24	12.29	13.65	15.36	18.43	19.61	19.61	19.61	19.61	19.61	19.61	19.61	19.61	19.61	19.61	19.61
5RK180RGU-□	5GU□K	34.0	41.0	57.0	68.0	85.1	102.0	113.0	128.0	153.0	184.0	204.0	230.0	278.0	300.0	300.0	300.0	300.0	300.0	300.0	300.0	300.0	300.0	300.0	300.0
		3.336	4.021	5.590	6.672	8.341	10.01	11.12	12.55	15.01	18.04	20.02	22.56	27.26	29.42	29.42	29.42	29.42	29.42	29.42	29.42	29.42	29.42	29.42	29.42
6RK120RGU-□	6GU□K	21.0	25.3	35.1	42.1	52.6	63.2	63.2	79.1	94.9	114.0	114.0	143.0	171.0	206.0	228.0	286.0	343.0	400.0	400.0	400.0	400.0	400.0	400.0	400.0
		2.06	2.48	3.44	4.13	5.16	6.19	6.19	7.75	9.30	11.20	11.20	14.00	16.80	20.00	22.40	28.00	33.60	39.20	39.20	39.20	39.20	39.20	39.20	39.20
6RK140RGU-□	6GU□K	24.1	28.8	40.1	48.1	60.1	72.1	72.1	90.3	108.0	130.0	130.0	163.0	196.0	235.0	261.0	327.0	392.0	400.0	400.0	400.0	400.0	400.0	400.0	400.0
		2.36	2.83	3.93	4.71	5.89	7.07	7.07	8.85	10.60	12.70	12.70	16.00	19.20	23.00	25.60	32.00	38.40	39.20	39.20	39.20	39.20	39.20	39.20	39.20
6RK180RGU-□	6GU□K	24.1	28.8	40.1	48.1	60.1	72.1	72.1	90.3	108.0	130.0	130.0	163.0	196.0	235.0	261.0	327.0	392.0	400.0	400.0	400.0	400.0	400.0	400.0	400.00
		2.36	2.83	3.93	4.71	5.89	7.07	7.07	8.85	10.60	12.70	12.70	16.00	19.20	23.00	25.60	32.00	38.40	39.20	39.20	39.20	39.20	39.20	39.20	39.20
6RK200RGU-□	6GU□K	24.1	28.8	40.1	48.1	60.1	72.1	72.1	90.3	108.0	130.0	130.0	163.0	196.0	235.0	261.0	327.0	392.0	400.0	400.0	400.0	400.0	400.0	400.0	400.0
		2.36	2.83	3.93	4.71	5.89	7.07	7.07	8.85	10.60	12.70	12.70	16.00	19.20	23.00	25.60	32.00	38.40	39.20	39.20	39.20	39.20	39.20	39.20	39.20

60Hz电机 单位: kgf.cm/N.m

转速Output Shaft Speed		600	500	360	300	240	200	180	144	120	100	90	72	60	50	45	36	30	24	20	18	15	12	10	9
减速比Reduction Ratio		3	3.6	5	6	7.5	9	10	12.5	15	18	20	25	30	36	40	50	60	75	90	100	120	150	180	200
3RK15RGN-□	3GN□K	2.9	3.5	4.9	5.8	7.3	8.7	9.7	12.2	14.6	17.5	17.5	21.9	26.3	31.5	35	39.6	47.5	59.4	71.3	79.2	80	80	80	80
		0.284	0.343	0.481	0.568	0.715	0.853	0.951	1.196	1.432	1.715	1.715	2.416	2.577	3.087	3.43	3.883	4.658	5.825	6.992	7.767	7.84	7.84	7.84	7.84
4RK25RGN-□	4GN□K	4.4	5.2	7.3	8.7	10.9	13.1	14.6	18.2	21.9	26.2	26.3	32.9	39.4	47.3	52.6	59.4	71.3	80.0	80.0	80.0	80.0	80.0	80.0	80.0
		0.431	0.510	0.715	0.853	1.068	1.284	1.431	1.784	2.146	2.568	2.577	3.224	3.861	4.635	5.155	5.821	6.987	7.84	7.84	7.84	7.84	7.84	7.84	7.84
5RK40RGN-□	5GN□K	6.8	8.2	11.3	13.6	17.0	20.4	22.7	28.4	34.0	40.8	40.9	51.1	61.3	73.6	81.8	100.0	100.0	100.0	100.0	100.0	100.0	100.0	100.0	100.0
		0.666	0.804	1.107	1.333	1.666	1.999	2.225	2.783	3.332	3.998	4.008	5.008	6.007	7.213	8.016	9.800	9.800	9.800	9.800	9.800	9.800	9.800	9.800	9.800
5RK60RGN-□	5GN□K	9.7	11.7	16.2	19.4	24.3	29.2	32.4	36.5	43.8	52.6	58.4	66.0	79.2	95.0	106.0	132.0	158.0	177.0	200.0	200.0	200.0	200.0	200.0	200.0
		0.953	1.147	1.588	1.901	2.381	2.862	3.175	3.577	4.292	5.155	5.726	6.648	7.762	9.31	10.39	12.94	15.48	17.35	19.60	19.60	19.60	19.60	19.60	19.60
5RK90RGU-□	5GU□K	14.6	17.5	24.3	29.2	36.5	43.7	48.6	54.8	65.7	78.8	87.6	99.0	119.0	143.0	158.0	198.0	200.0	200.0	200.0	200.0	200.0	200.0	200.0	200.0
		1.431	1.715	2.381	2.862	3.577	4.675	4.763	5.370	6.439	7.722	8.585	9.702	11.66	14.01	15.48	19.40	19.60	19.60	19.60	19.60	19.60	19.60	19.60	19.60
5RK120RGU-□	5GU□K	18.7	22.5	31.2	37.4	46.8	56.1	62.4	70.2	84.2	101.0	112.0	126.0	152.0	182.0	200.0	200.0	200.0	200.0	200.0	200.0	200.0	200.0	200.0	200.0
		1.835	2.202	3.058	3.670	4.587	5.505	6.116	6.881	8.257	9.909	11.01	12.39	14.86	17.84	19.61	19.61	19.61	19.61	19.61	19.61	19.61	19.61	19.61	19.61
5RK180RGU-□	5GU□K	28.1	34.0	47.0	57.0	71.0	84.2	94.0	105.0	126.0	152.0	168.0	189.0	227.0	273.0	300.0	300.0	300.0	300.0	300.0	300.0	300.0	300.0	300.0	300.0
		2.756	3.334	4.609	5.590	6.963	8.257	9.218	10.30	12.39	14.91	16.51	18.58	22.29	26.75	29.42	29.42	29.42	29.42	29.42	29.42	29.42	29.42	29.42	29.42
6RK120RGU-	6GU□K	17.8	21.3	29.6	35.5	44.4	53.3	53.3	69.7	80.0	96.1	96.1	121.0	146.0	174.0	193.0	241.0	289.0	362.0	400.0	400.0	400.0	400.0	400.0	400.0
		1.74	2.09	2.90	3.48	4.35	5.22	5.22	6.54	7.85	9.42	9.42	11.80	14.20	17.00	18.90	23.60	28.40	35.50	39.20	39.20	39.20	39.20	39.20	39.20
6RK140RGU-□	6GU□K	20.7	24.9	34.6	41.2	51.8	62.1	62.1	77.6	93.4	112.0	112.0	141.0	169.0	203.0	226.0	282.0	338.0	400.0	400.0	400.0	400.0	400.0	400.0	400.0
		2.03	2.44	3.39	4.06	5.08	6.09	6.09	7.60	9.15	11.00	11.00	13.80	16.60	19.90	22.10	27.60	33.10	39.20	39.20	39.20	39.20	39.20	39.20	39.20
6RK180RGU-□	6GU□K	20.7	24.9	34.6	41.2	51.8	62.1	62.1	77.6	93.4	112.0	112.0	141.0	169.0	203.0	226.0	282.0	338.0	400.0	400.0	400.0	400.0	400.0	400.0	400.0
		2.03	2.44	3.39	4.06	5.08	6.09	6.09	7.60	9.15	11.00	11.00	13.80	16.60	19.90	22.10	27.60	33.10	39.20	39.20	39.20	39.20	39.20	39.20	39.20
6RK200RGU-□	6GU□K	20.7	24.9	34.6	41.2	51.8	62.1	62.1	77.6	93.4	112.0	112.0	141.0	203.0	226.0	282.0	338.0	400.0	400.0	400.0	400.0	400.0	400.0	400.0	400.0
		2.03	2.44	3.39	4.06	5.08	6.09	6.09	7.60	9.15	11.00	11.00	13.80	16.60	19.90	22.10	27.60	33.10	39.20	39.20	39.20	39.20	39.20	39.20	39.20

GS型带耳朵箱体减速电机GS-Gear Motor

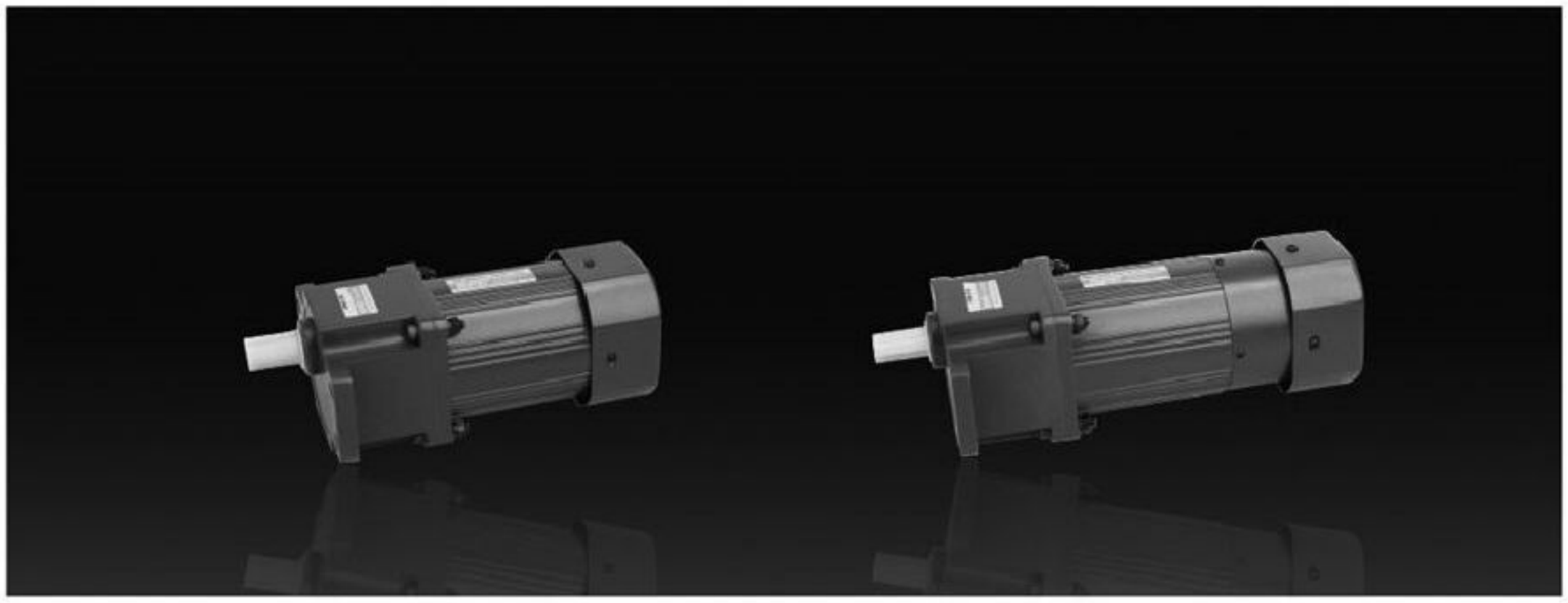

外形尺寸 Overall Dimension

感应、可逆、调速电机

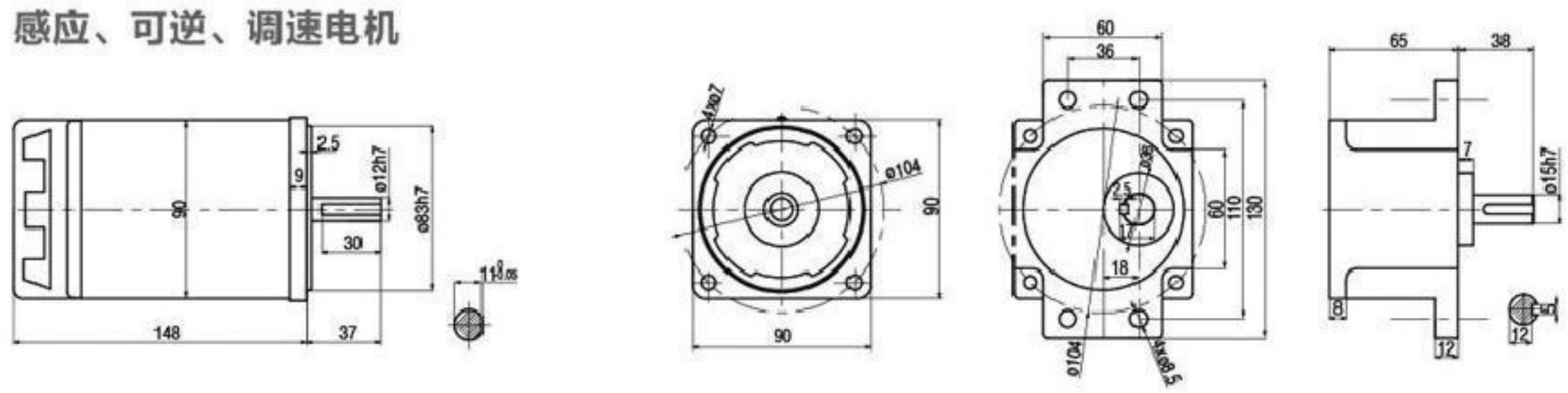

刹车、刹车调速电机

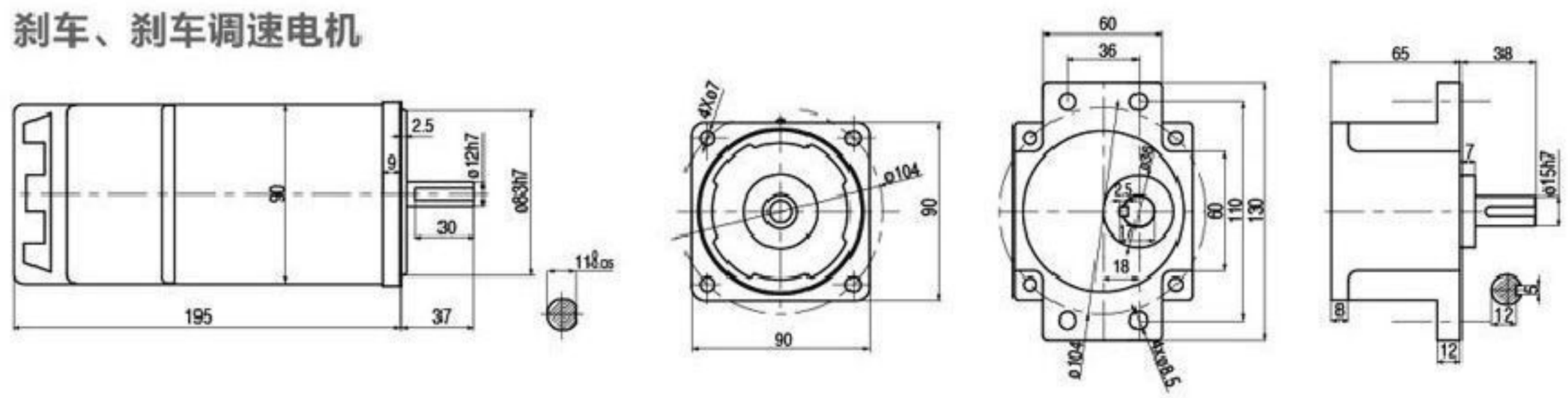

装有减速机时的容许转矩 allowable torque with gearbox

50Hz电机 单位: kgf.cm/N.m

转速Output Shaft Speed		500	417	300	250	200	166	150	120	100	83	75	60	50	41	37	30	25	20	16	15	12	10	8	7.5
减速比Reduction Ratio		3	3.6	5	6	7.5	9	10	12.5	15	18	20	25	30	36	40	50	60	75	90	100	120	150	180	200
5IK90GU-□	5GS□K	18.2	21.9	30.4	36.5	45.6	54.7	60.8	68.4	82.1	98.6	110.0	124.0	149.0	178.0	198.0	200.0	200.0	200.0	200.0	200.0	200.0	200.0	200.0	200.0
		1.784	2.145	2.979	3.577	4.469	5.361	5.958	6.703	8.046	9.663	10.78	12.15	14.60	17.44	19.40	19.60	19.60	19.60	19.60	19.60	19.60	19.60	19.60	19.60
5IK120GU-□	5GS□K	23.2	27.8	38.7	46.4	58.0	69.6	77.4	87.0	104.0	125.0	139.0	156.0	188.0	200.0	200.0	200.0	200.0	200.0	200.0	200.0	200.0	200.0	200.0	200.0
		2.276	2.731	3.793	4.552	5.689	6.827	7.586	8.534	10.24	12.29	13.65	15.36	18.43	19.61	19.61	19.61	19.61	19.61	19.61	19.61	19.61	19.61	19.61	19.61

安装支架座

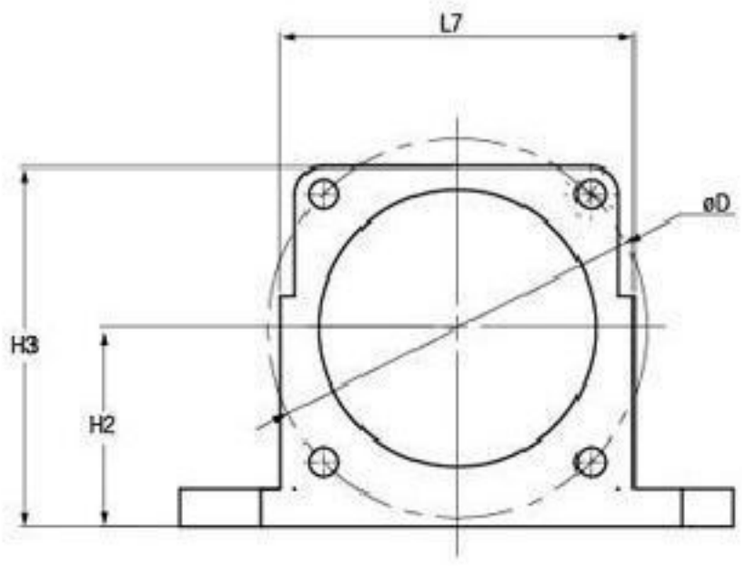

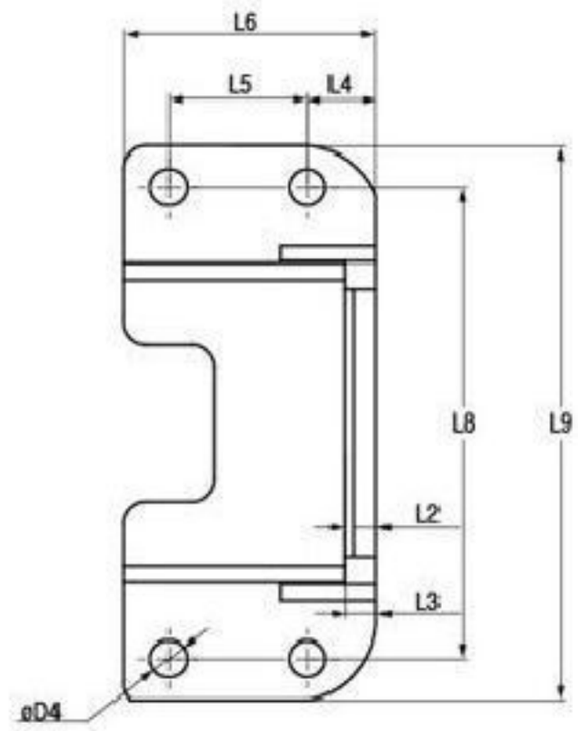

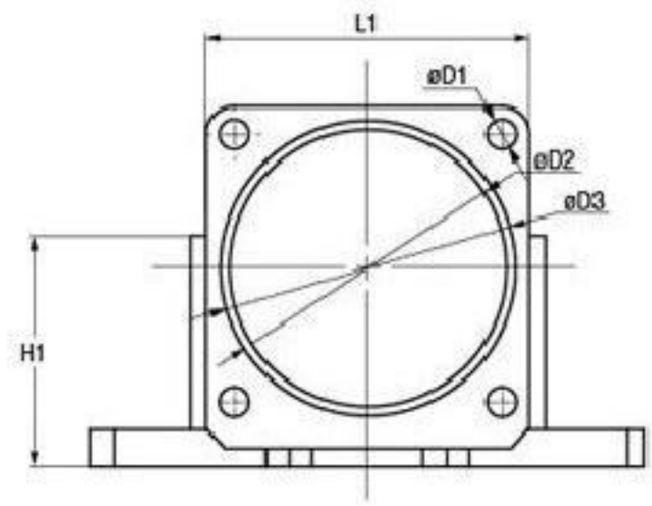

尺寸/型号	D1	D2	D3	D4	D	L1	L2	L3	L4	L5	L6	L7	L8	L9	H	H1	H2	H3
DPG3M5	6.50	64	60	8	82	70	7	2	15	30	55	76.60	102	120	8	50	43	78
DPG4M5	5.50	73	69	10	94	80	7	2	14	35	60	88	102	120	10	58	48.50	89
DPG5M5	7	83	73	7	104	90	7	2	10	40	80	100	115	131	8	52.40	51	96
DPG6M5	8.50	95	92	10	120	104	10	2	16	50	75	124	143	159	10.50	76.50	73	125

塑料接线盒(适用70、80、90、100电机)

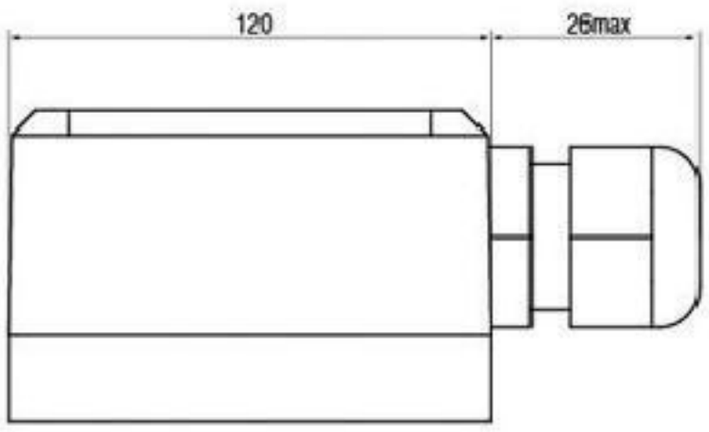

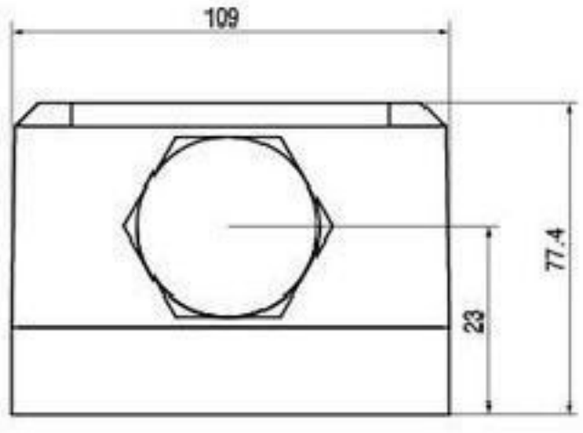

铝制接线盒(适用90、100电机)

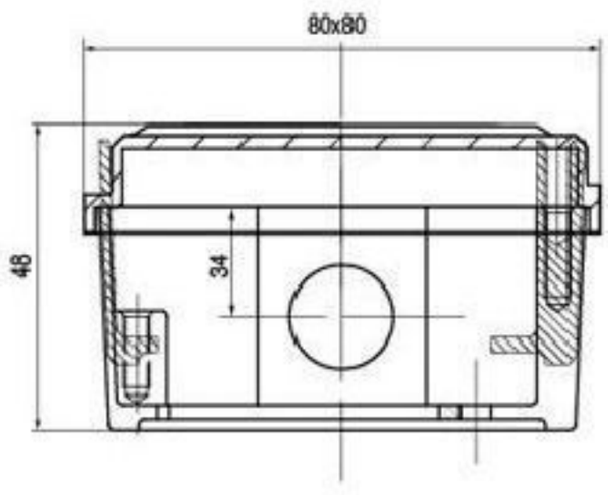

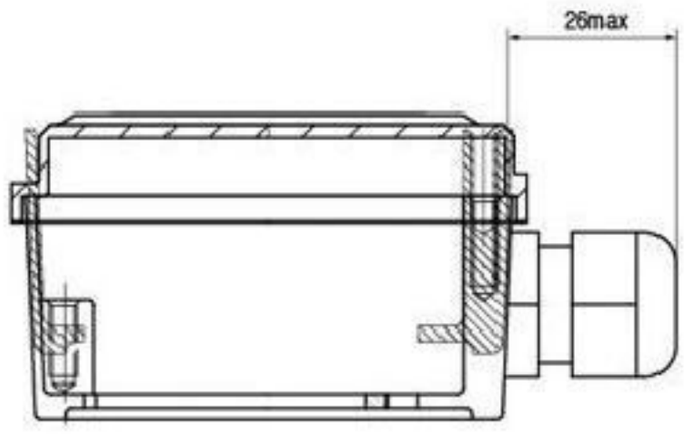

接线图 Wiring Diagram

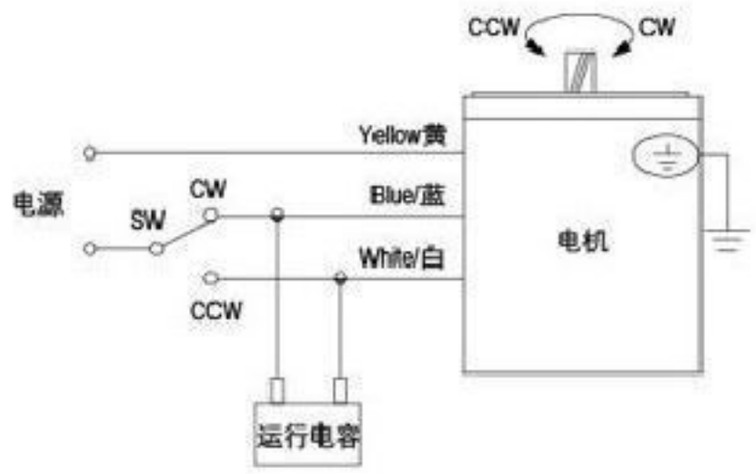

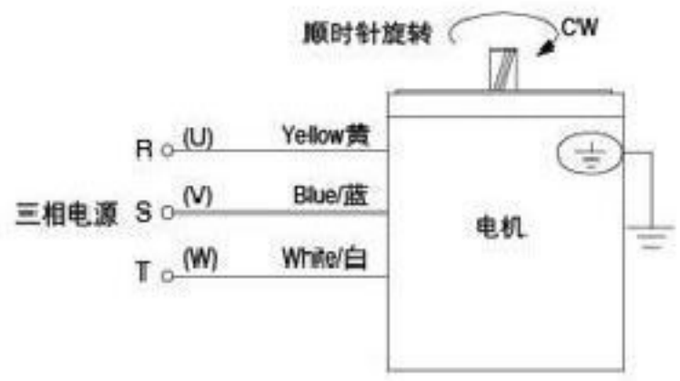

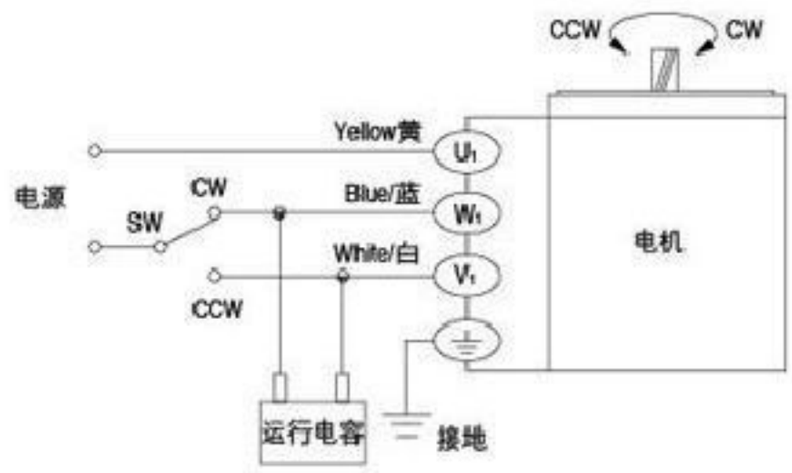

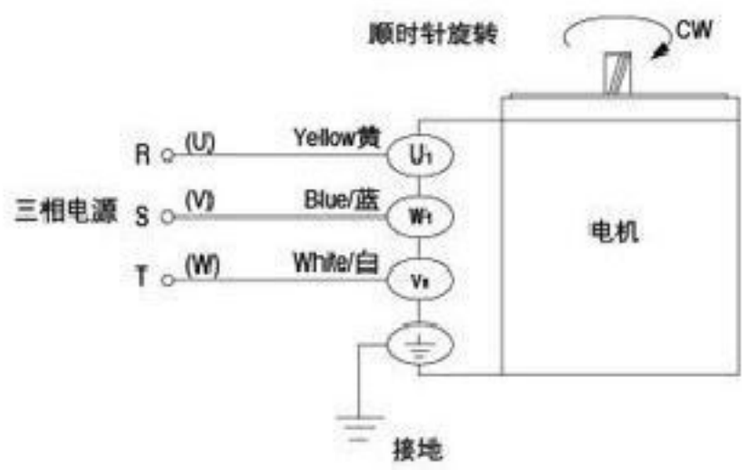

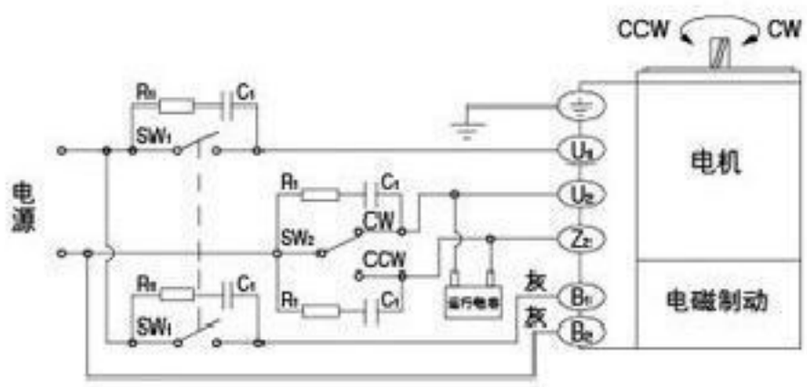

R_0C_0为消弧器（随机附件）

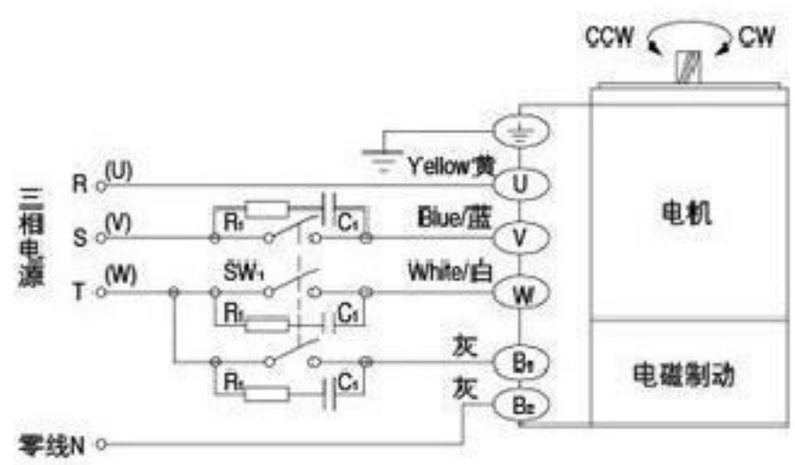

电容器 Capacitor

电容容量 Capacity μF 允许偏差±5%	耐压 Voltage V	长 L±1 mm	宽 W±1 mm	高 H±1 mm	类型 Type
1.5	500	38	14	28	
2	500	38	15	28	
2.5	500	38	18	29	
3	500	47	18	32	引线型
3.5	500	49	21	29	
5	500	47	23	36	
6	500	47	23	36	

电容容量 Capacity μF 允许偏差±5%	耐压 Voltage V	长 L±1 mm	宽 W±1 mm	高 H±1 mm	类型 Type
6.5	500	47	23	36	
8	500	47	26	39	
10	450	58	23	39	
12	500	58	25	45	引线型
18	250	58	23	39	
30	450	68	32	56	